1/35 SCALE

ITEM NO.:09541

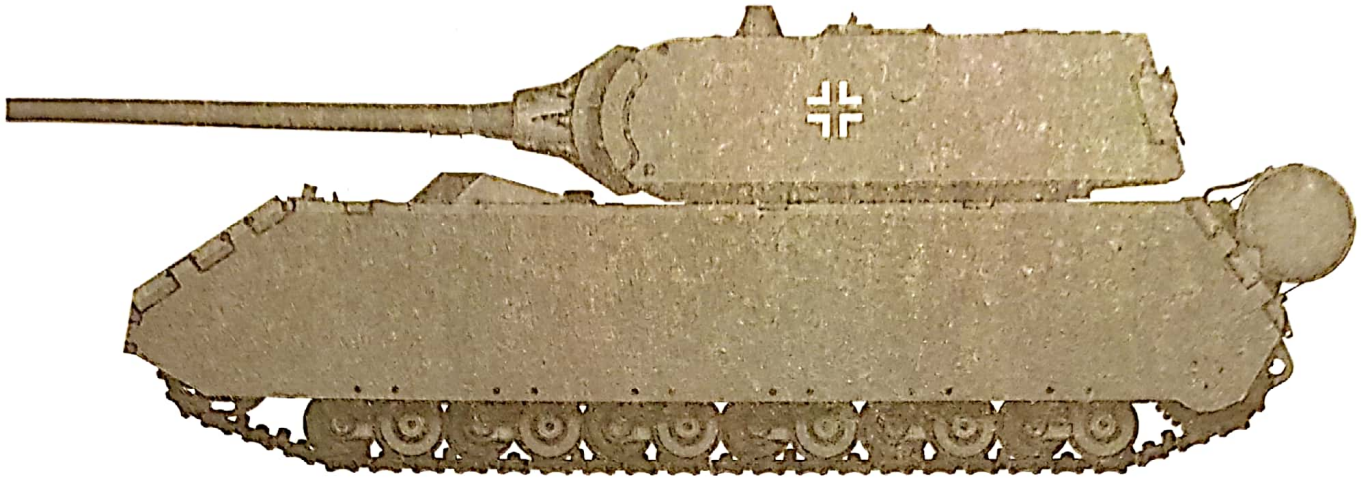

Pz.Kpfw.VIII Maus

德国鼠式重型坦克

READ BEFORE ASSEMBLY:

- Study and understand these instructions thoroughly before beginning assembly
- When needed, remove photo-etch parts carefully using a modeling knife or photo etch sprue cutter, being careful not to damage or lose small parts.
- Take extra care in handling photo etch parts in order to avoid injury
- Apply instant cement sparingly to photo etch parts where instructed
- Tools recommended(not included in kit):Plastic and instant cements, sprue cutters,long nose pliers,modeling knife, small files, tweezers, pin vise & scissors. Soft cloth and sandpaper will also assist in construction
- Glue and paint are not included in the kit. Use plastic cement and hobby paints only. Color guide for purchasing paint is included in the kit.

装配之前仔细阅读

- 小心用模型锉刀锉平所有零件表面的注射浇口。
- 小心用刀片切下蚀刻片零件，不要遗失小零件。
- 用强力快干胶水粘合蚀刻片零件和金属轴。过量快干胶水使用可能导致可动零件会粘住，小心涂胶。
- 取蚀刻片时应特别注意安全，防止利边划伤手指。
- 某些零件表面需贴上水贴纸，请选择在装配的同时进行。
- 推荐模型工具(自备)：胶水，水口剪刀，长咀钳，刀片，锉刀，镊子，钳，钻，剪刀，瞬间快干胶。
- 软布同砂纸同时也应该是必备工具。
- 请使用塑料胶水和油漆，模型内不含。

配重
Weight

使用强力胶
Cyanoacrylate glue

钻孔
Make hole

切除
Cut / Remove

贴纸
Decal

锉平
File / Sand

选择
Option

不涂胶水
No cement

弯曲
Bend

先装
Install it first

水贴纸的使用：

1.从水贴纸上剪下印花；
2.将印花放入温水中浸10秒，然后放在干净布上。
3.拿着印花纸板将印花移到模型上；
4.手指蘸水将印花移到适当的位置；
5.用软布轻压印花直至水干，汽泡消失

DECAL APPLICATION

1.Cut decals from sheet as needed
2.Dip the decal in warm water for about 10 seconds and then place on soft clean cloth.
3.Hold the decal backing sheet edge and gently slide the decal onto the model in its proper position.
4.While still wet,decal can be adjusted for better fit on model by dampening it gently with your finger.
5.When placed in the proper position,gently press decal down with a soft cloth until excess water and air bubbles are gone.
6.Allow decal to dry completely before handling model

Scanned by CamScanner

部品图
Parts

(车底)
Lower hull

A1

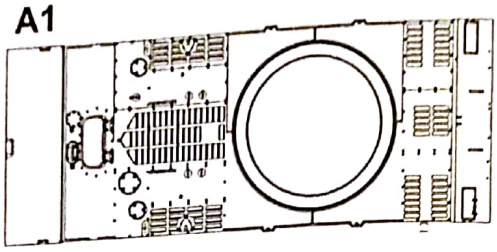

A2

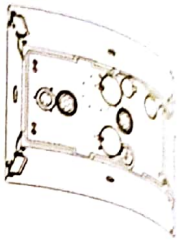

B

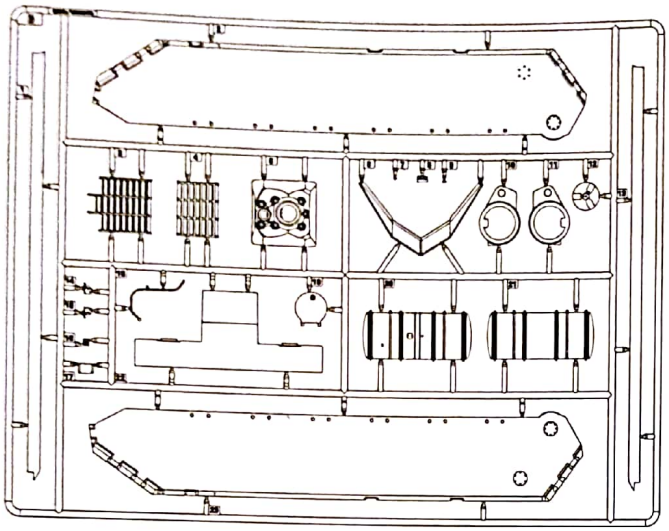

C

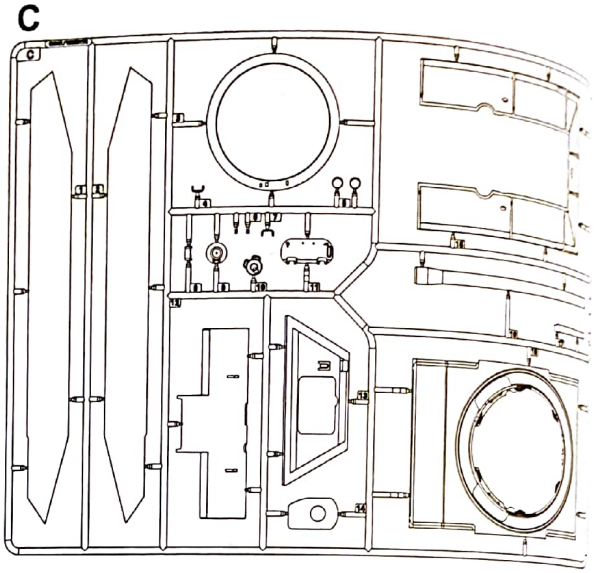

Dx12

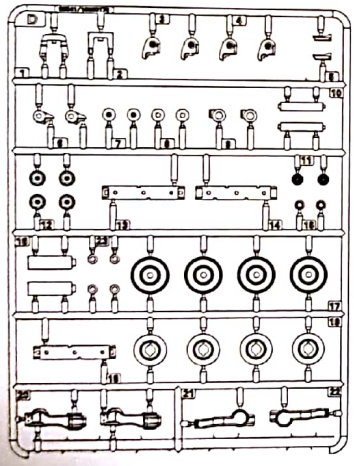

Ex7

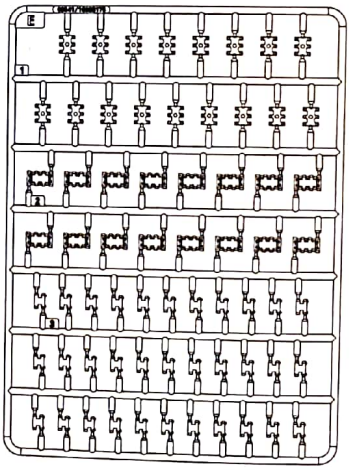

Fx2

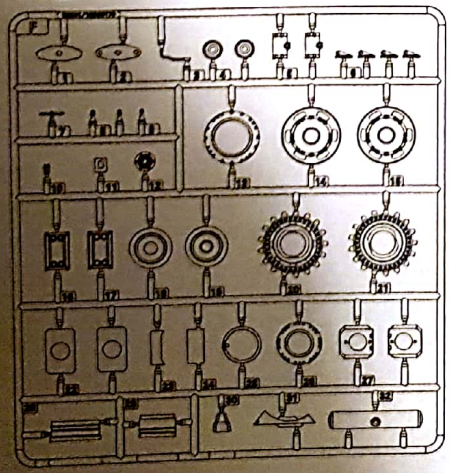

Gx2

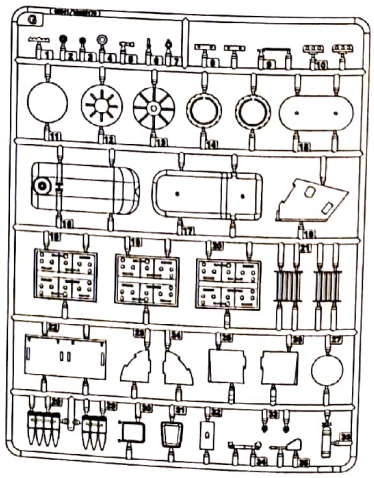

Scanned by CamScanner

部品图
Parts

H

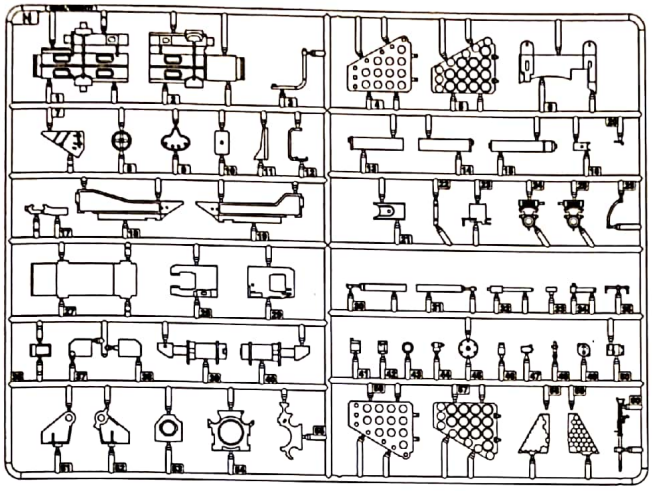

J

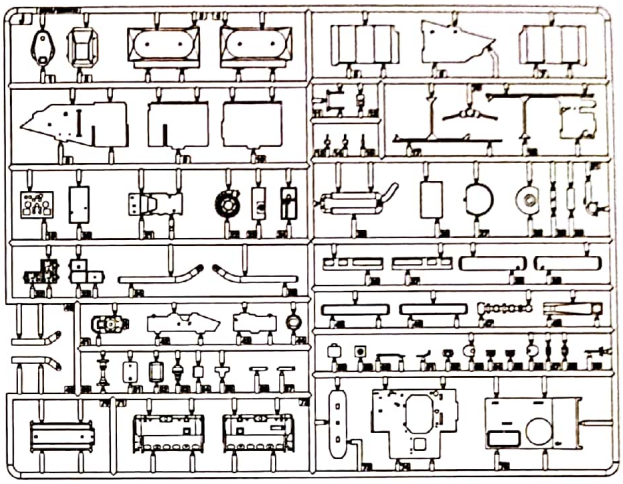

K

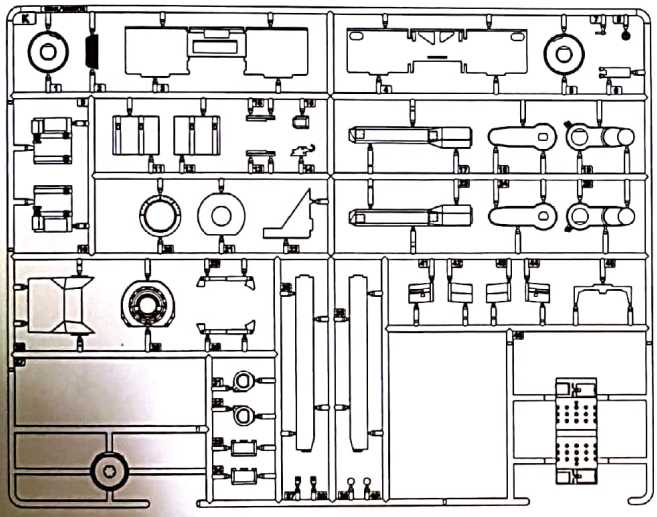

TRx110

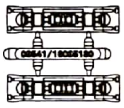

PE(A)

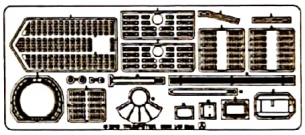

GP

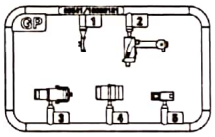

《链条》长:25
Chain

《水贴》
Decal

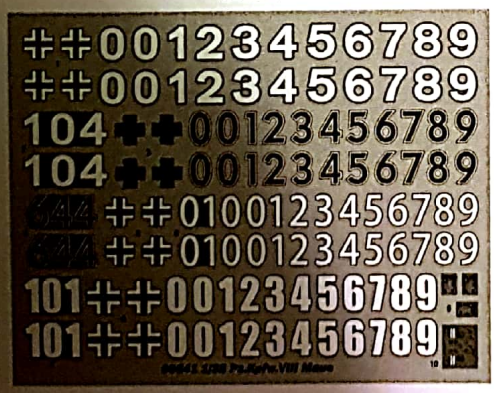

Scanned by CamScanner

1 车底组装 Lower hull assembly

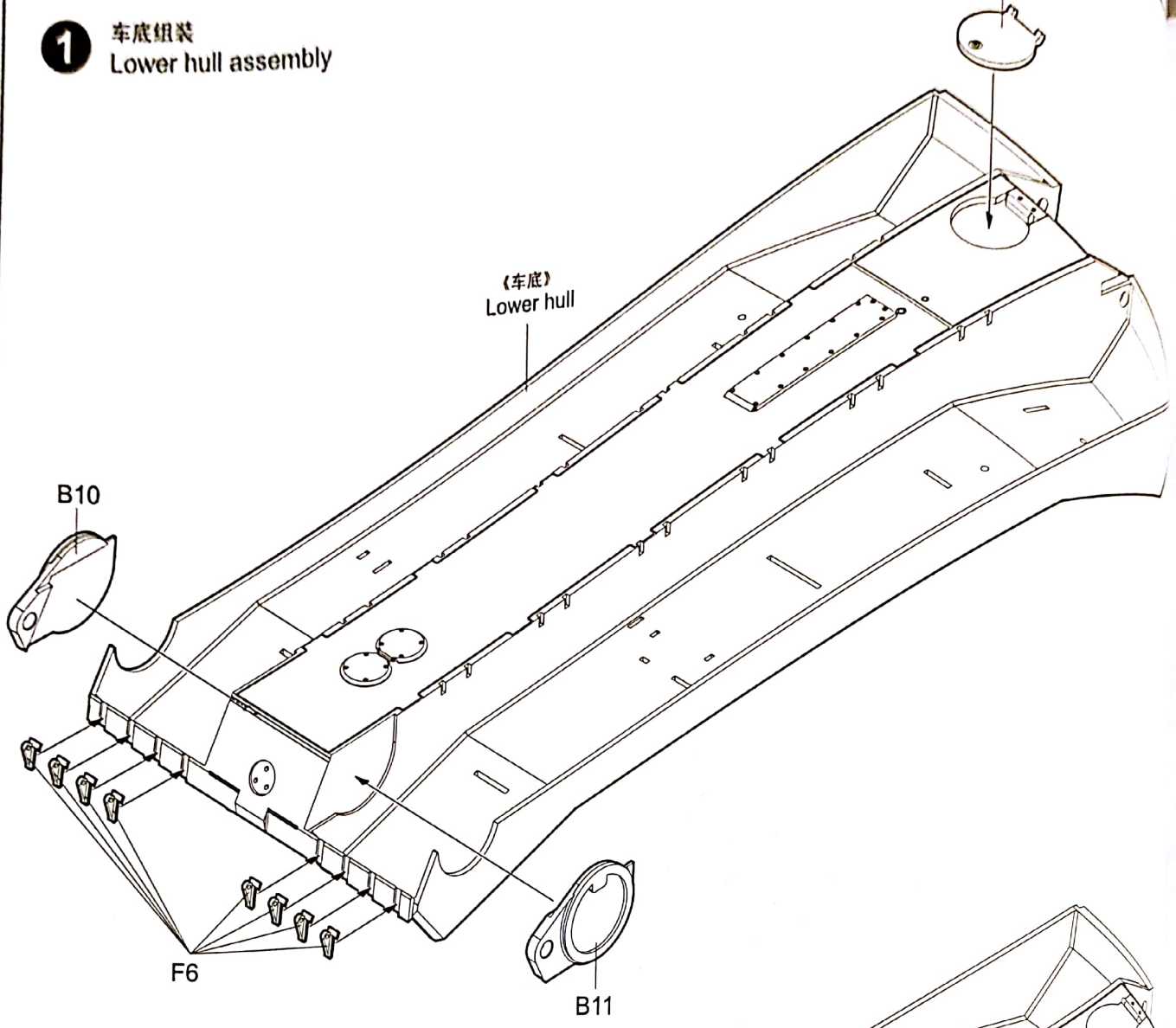

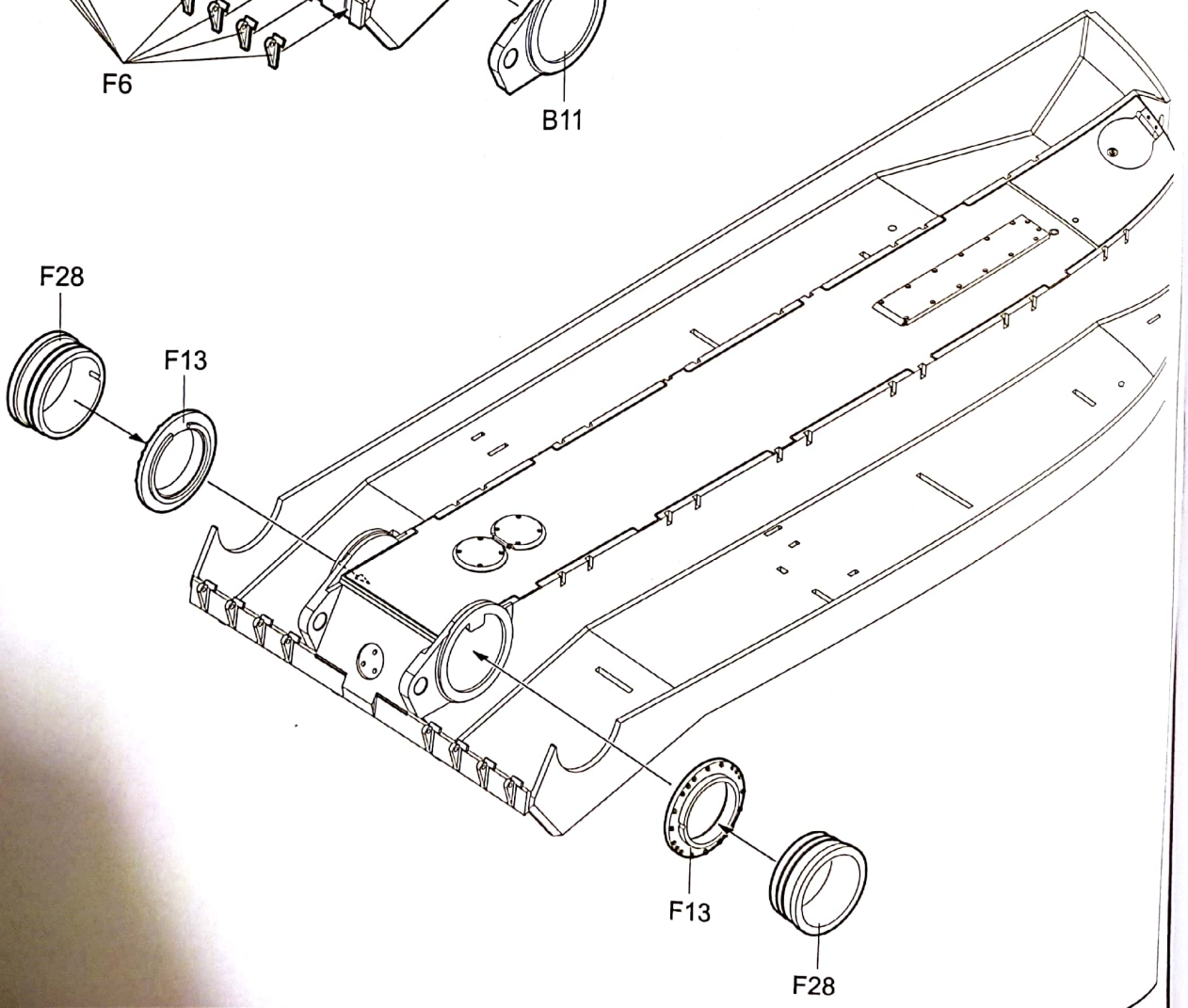

Scanned by CamScanner

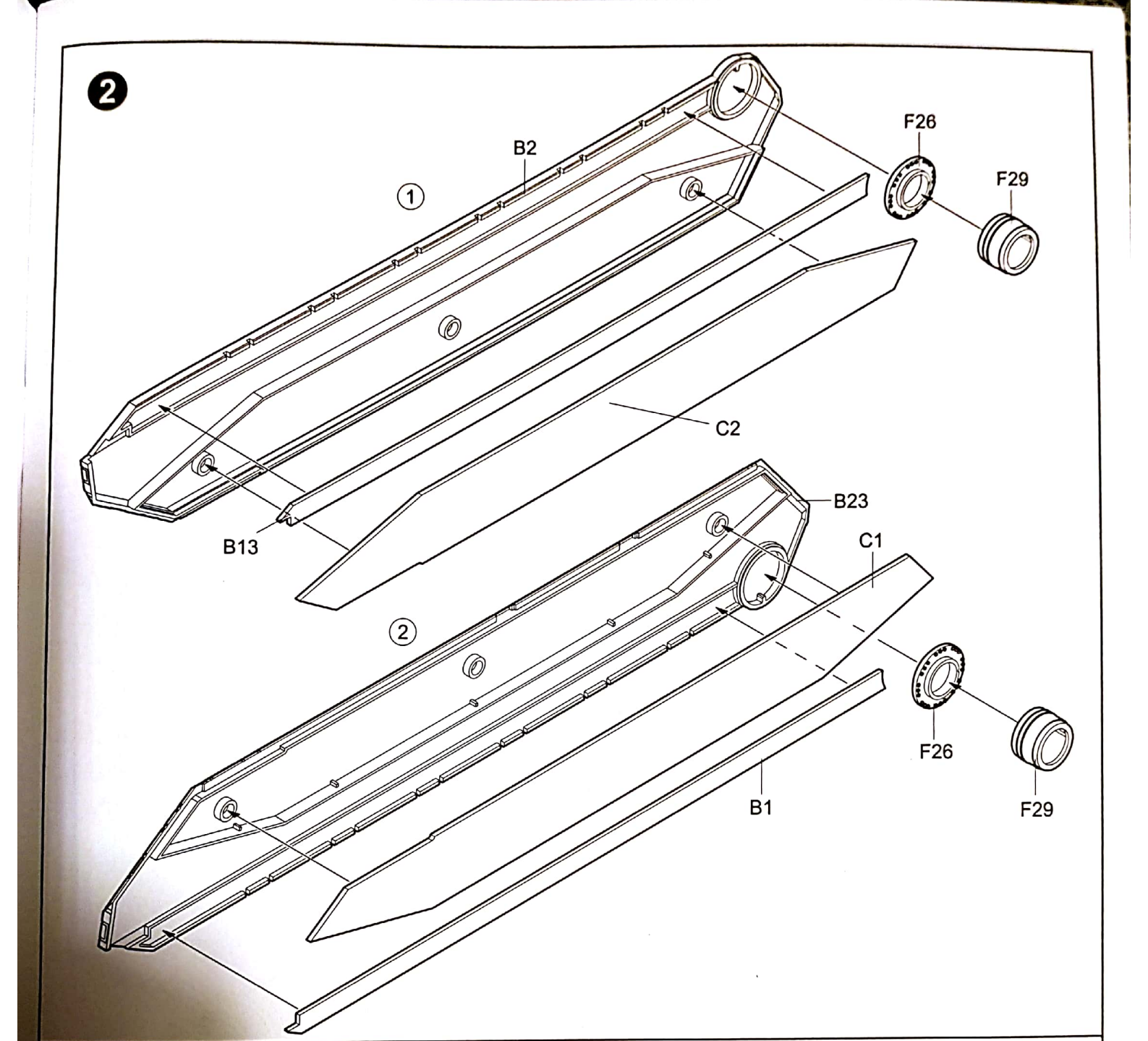

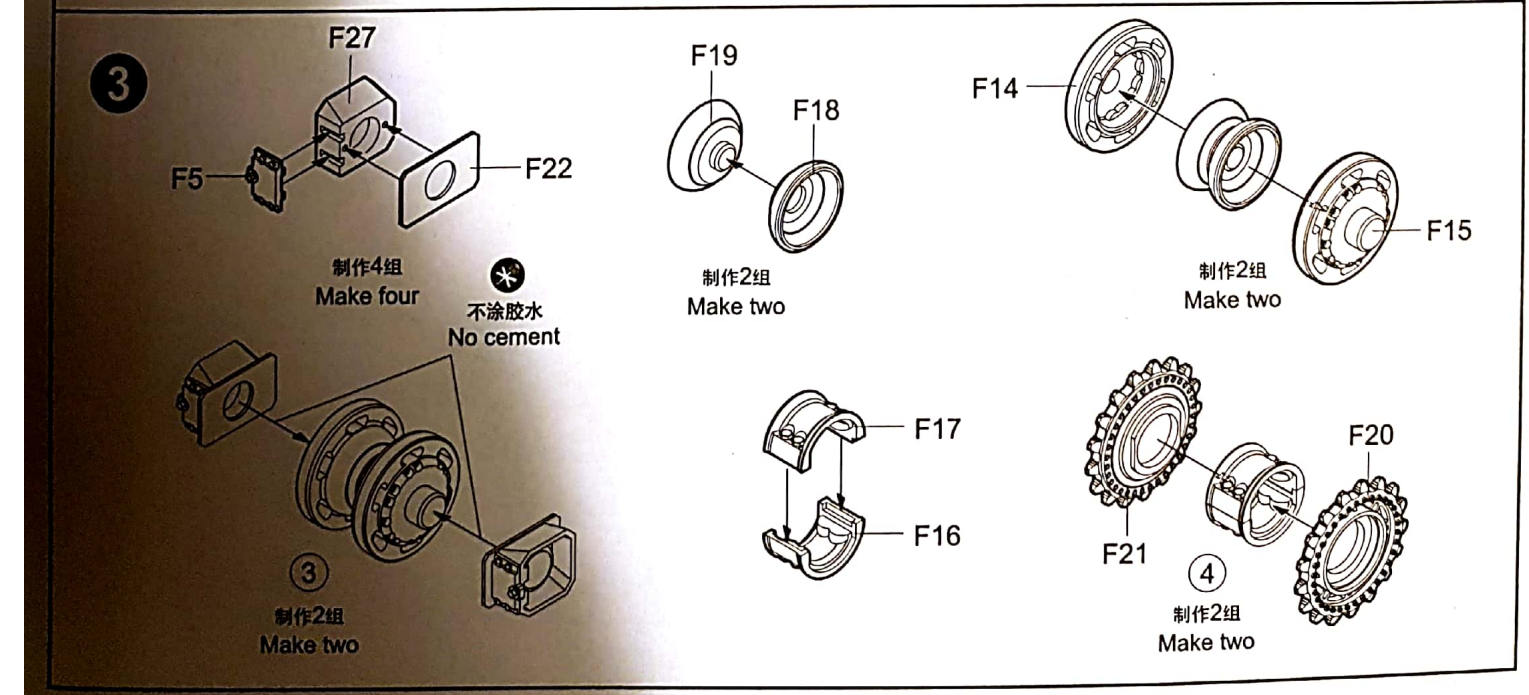

Scanned by CamScanner

4

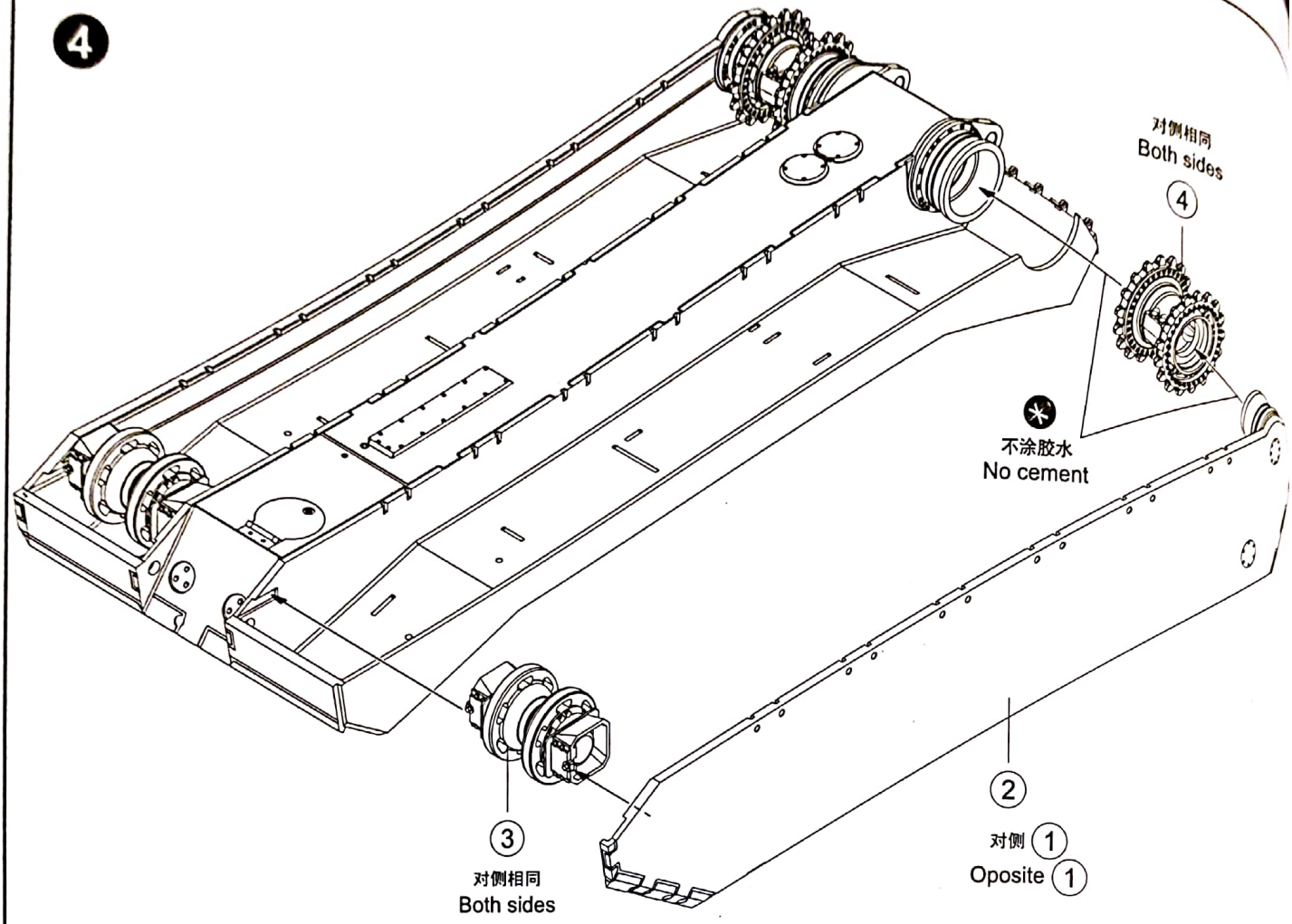

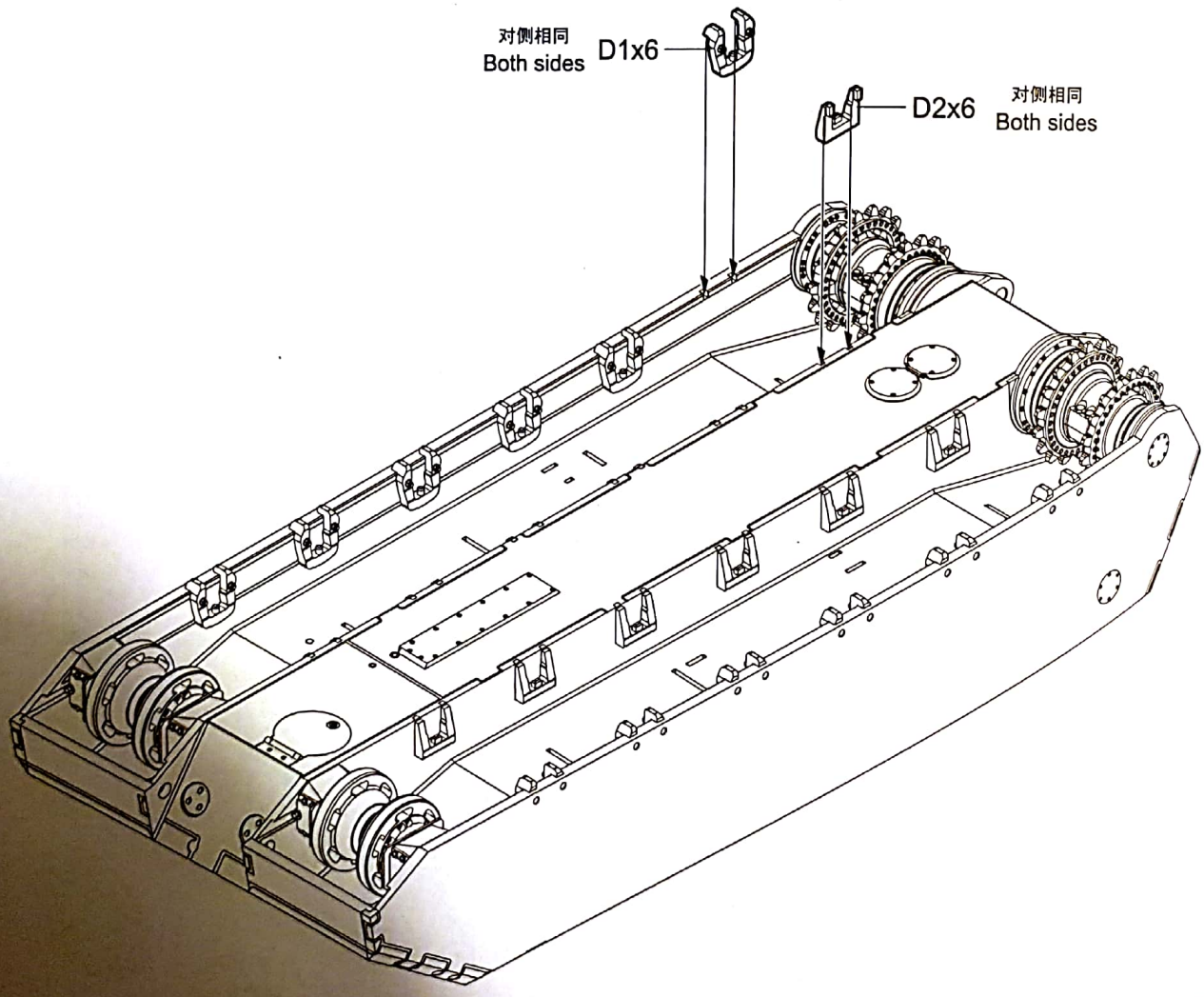

Scanned by CamScanner

5

不涂胶水
No cement

E2x55

TRx54

E1x54

E3x53

不涂胶水
No cement

E3x53

5

制作2组
Make two

对侧相同
Both sides

5

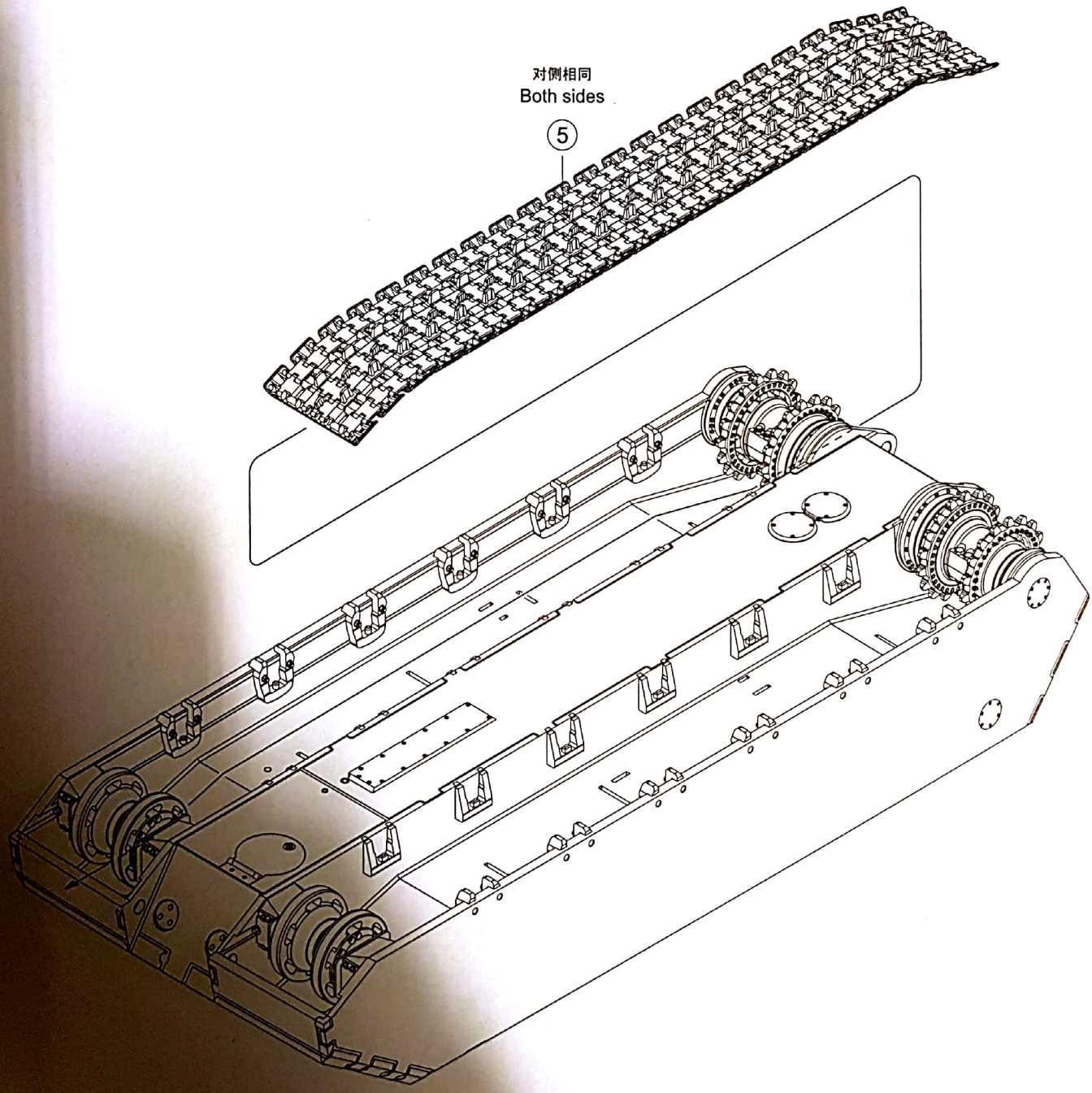

Scanned by CamScanner

6

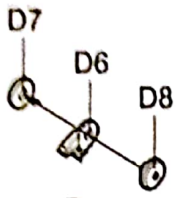

⑥
制作24组
Make twenty four

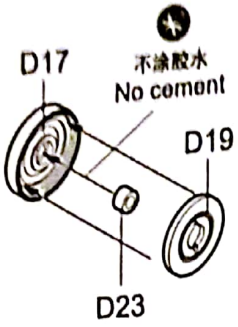

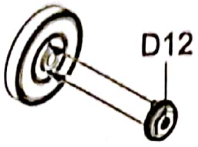

⑦
制作48组
Make forty eight

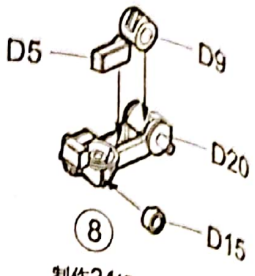

⑧
制作24组
Make twenty four

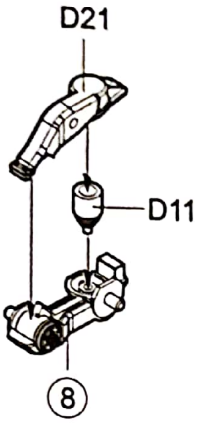

⑧

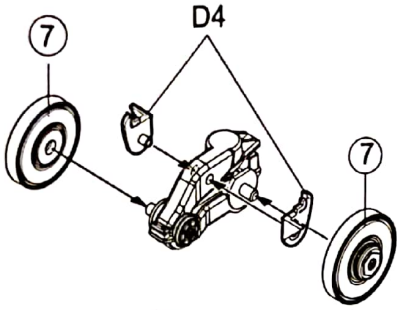

⑨
制作12组
Make twelve

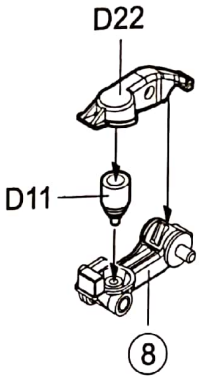

⑧

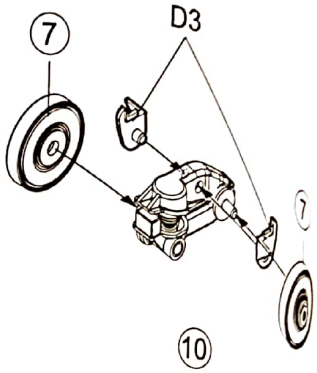

⑩
制作12组
Make twelve

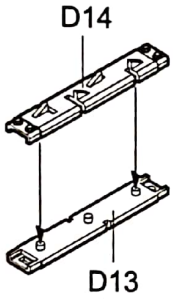

制作6组
Make six

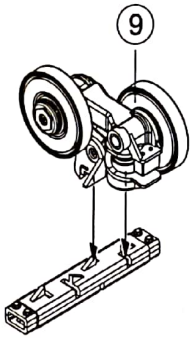

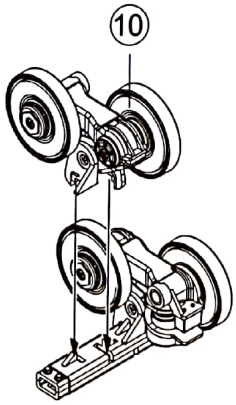

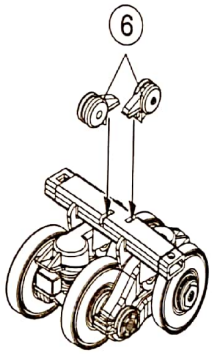

⑪
制作6组
Make six

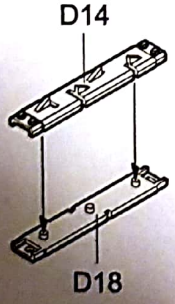

制作6组
Make six

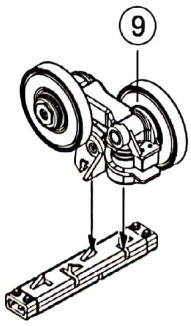

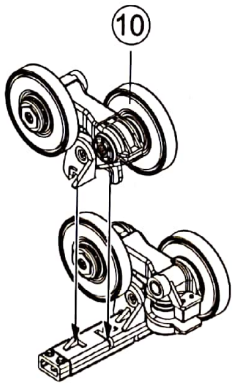

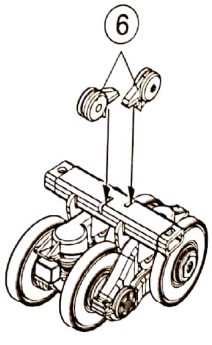

⑫
制作6组
Make six

Scanned by CamScanner

7

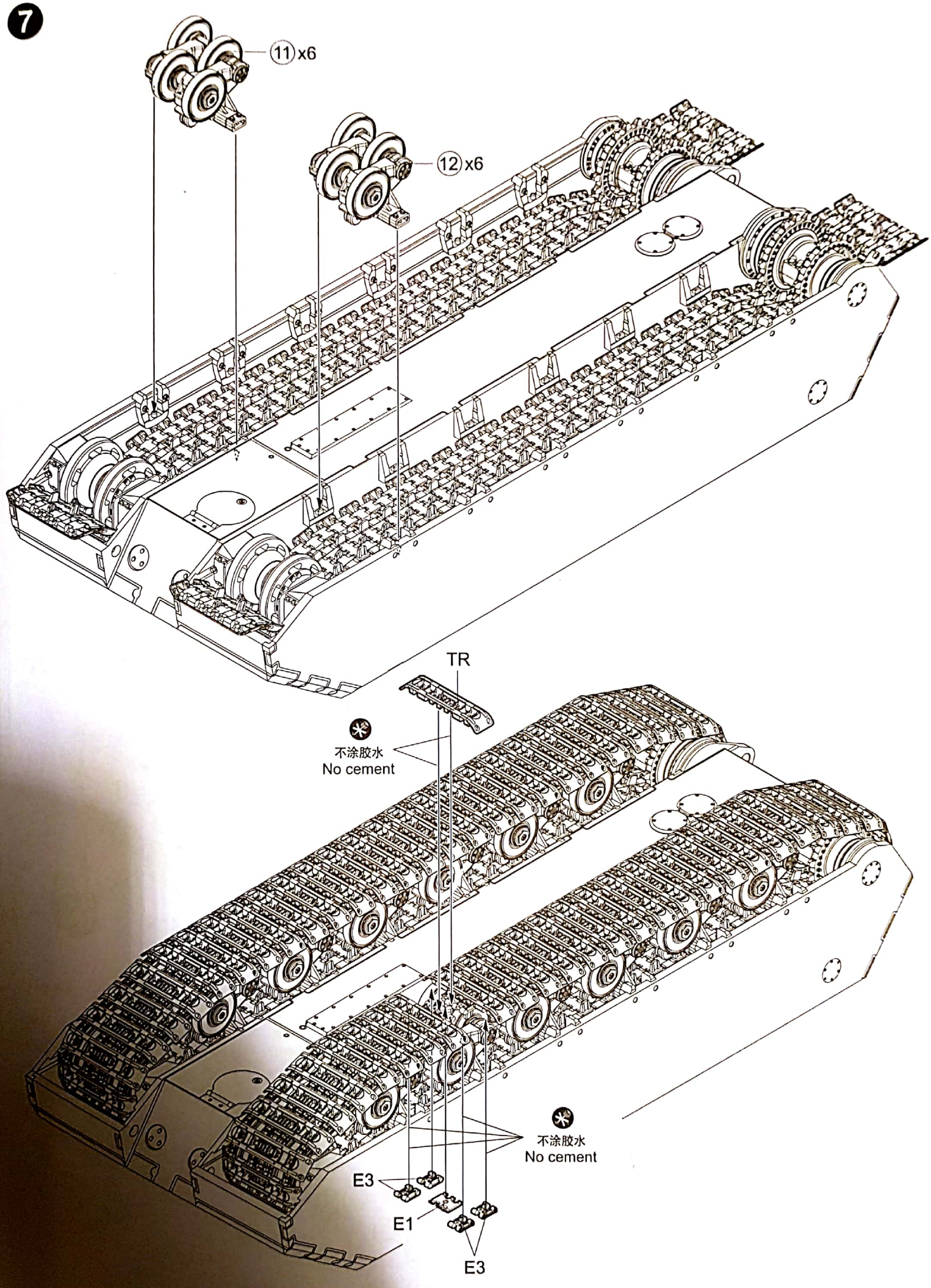

Scanned by CamScanner

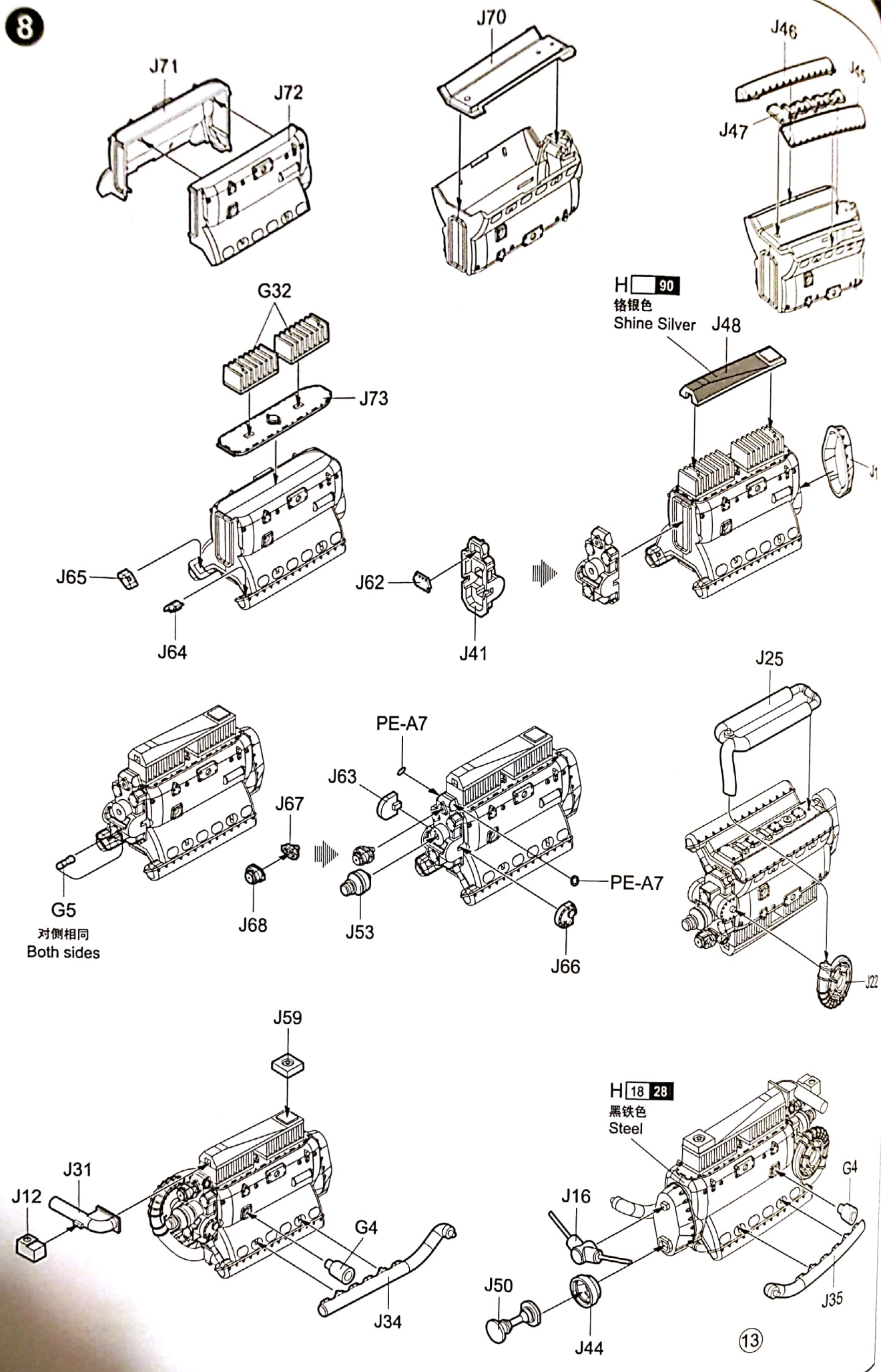

Scanned by CamScanner

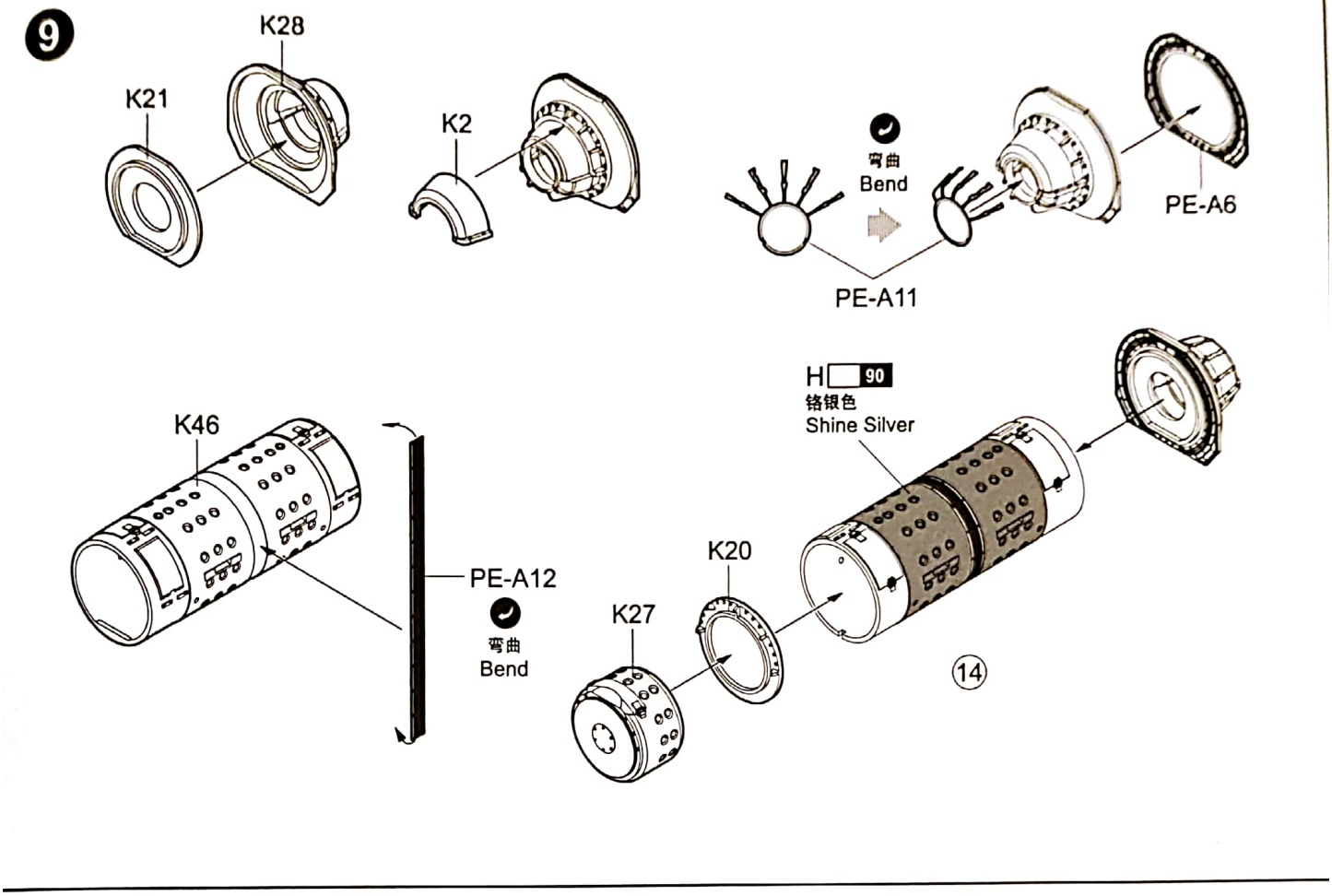

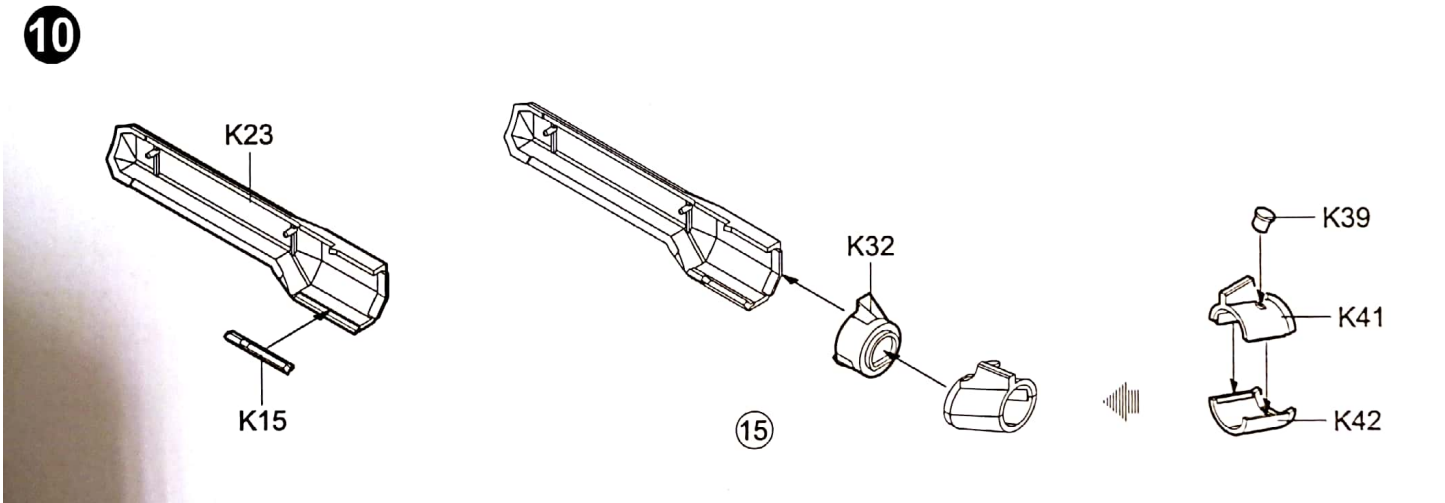

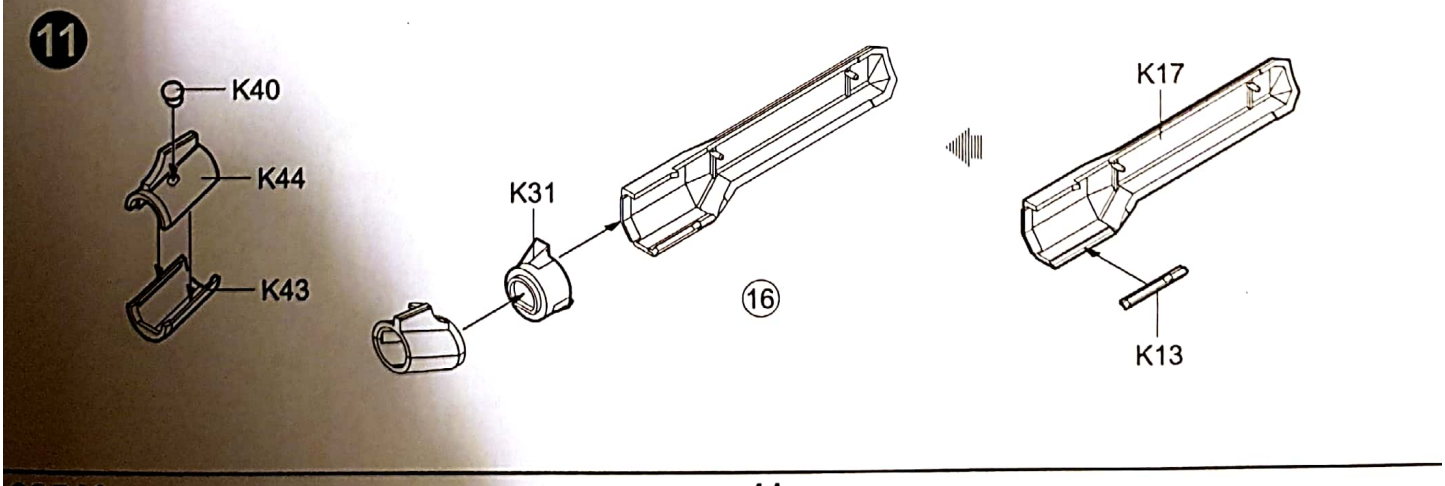

Scanned by CamScanner

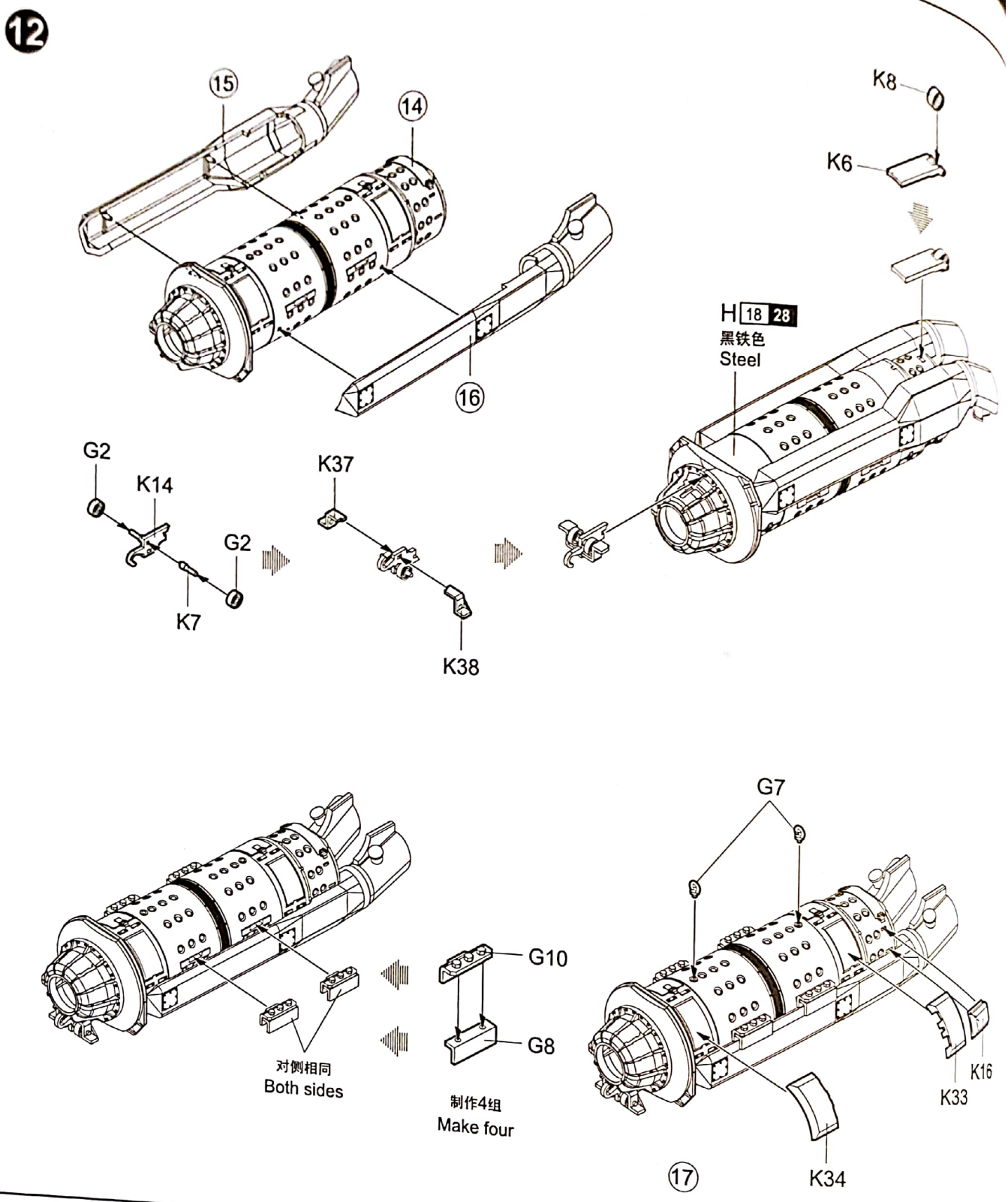

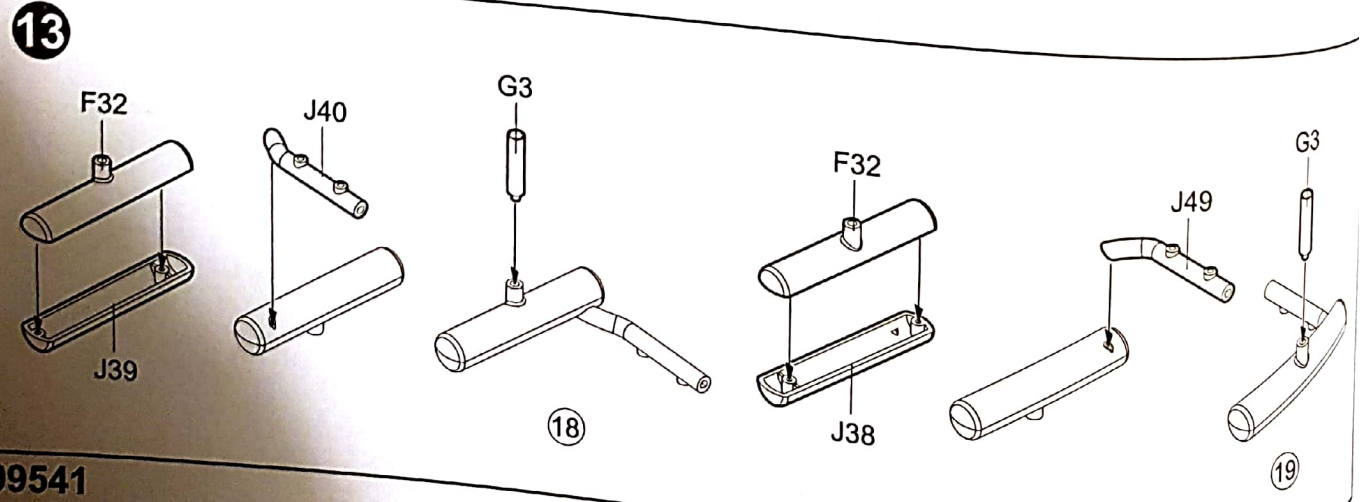

Scanned by CamScanner

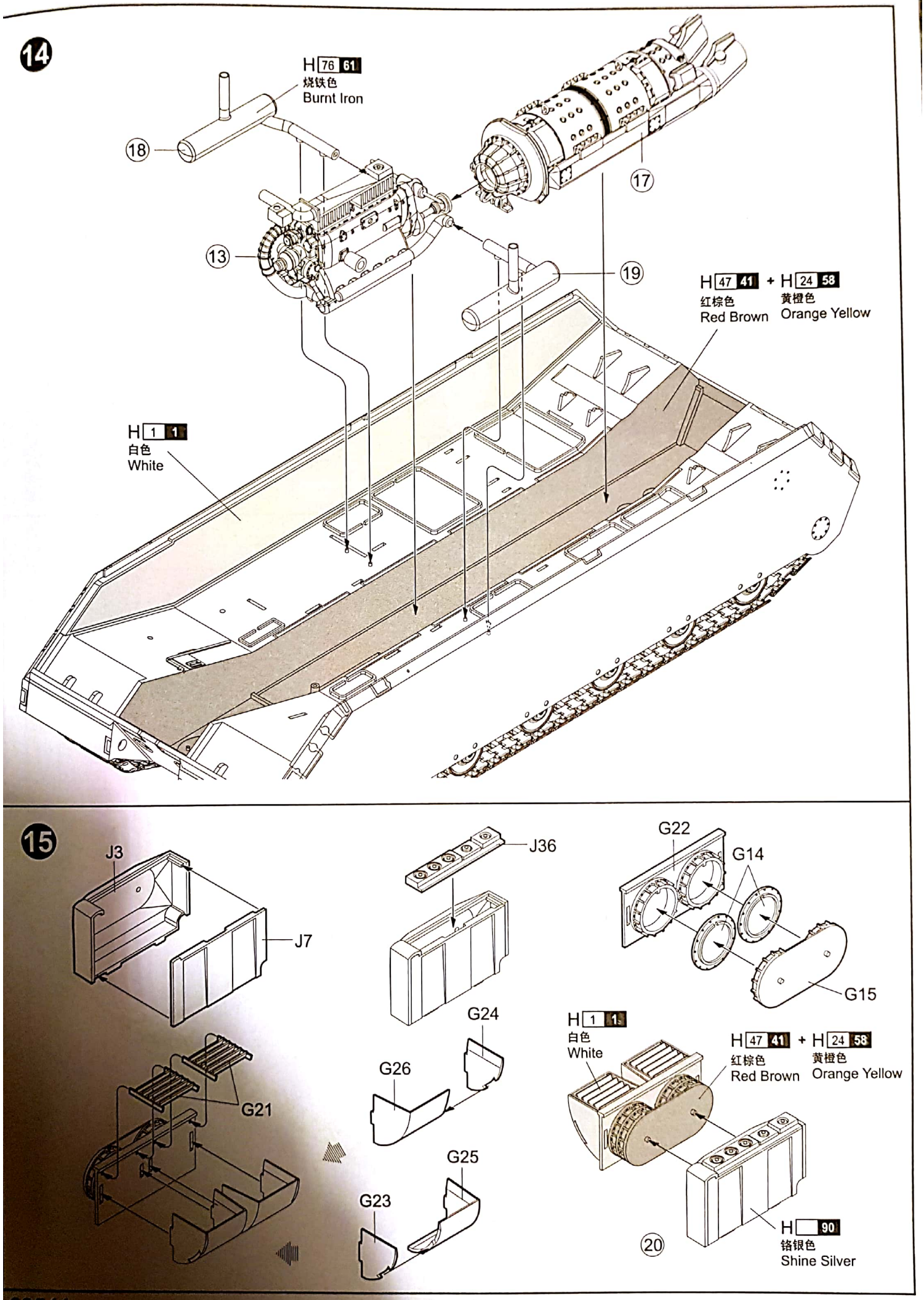

Scanned by CamScanner

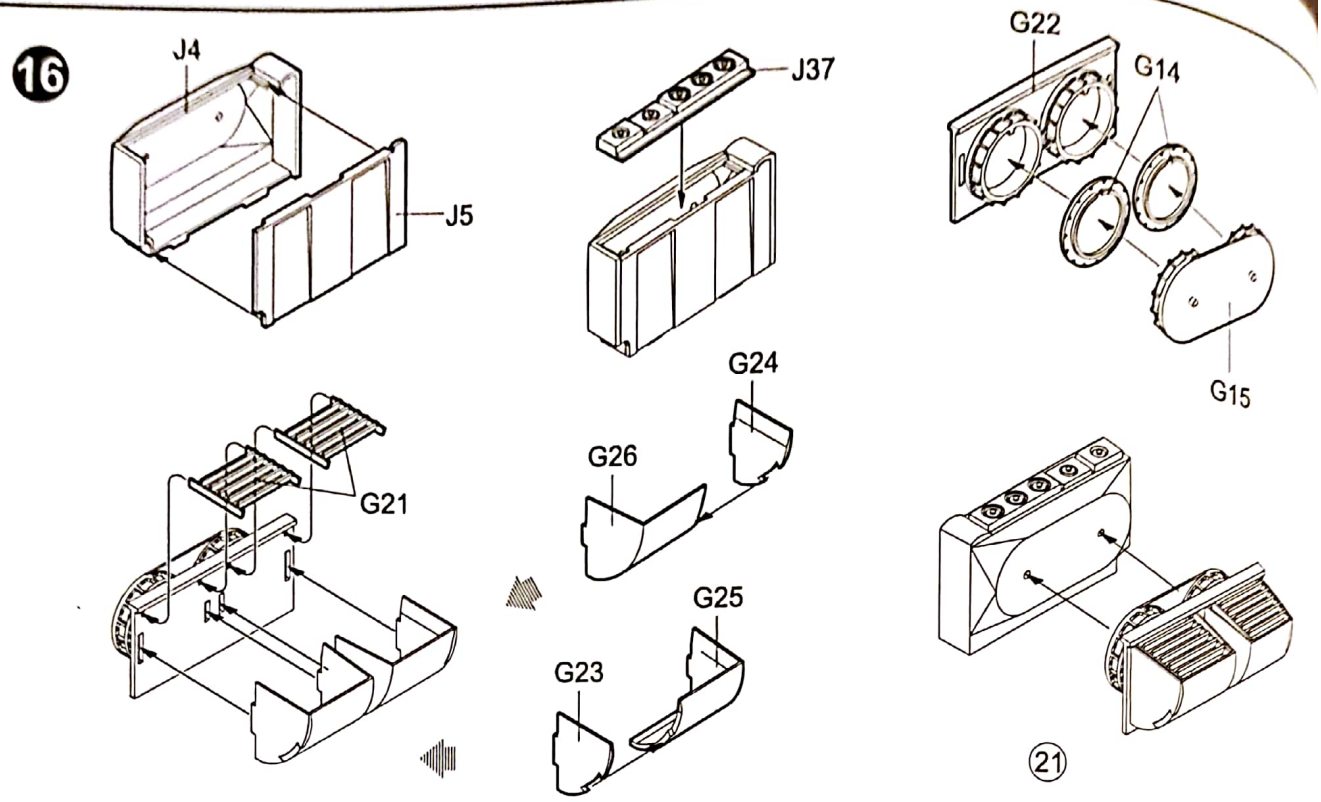

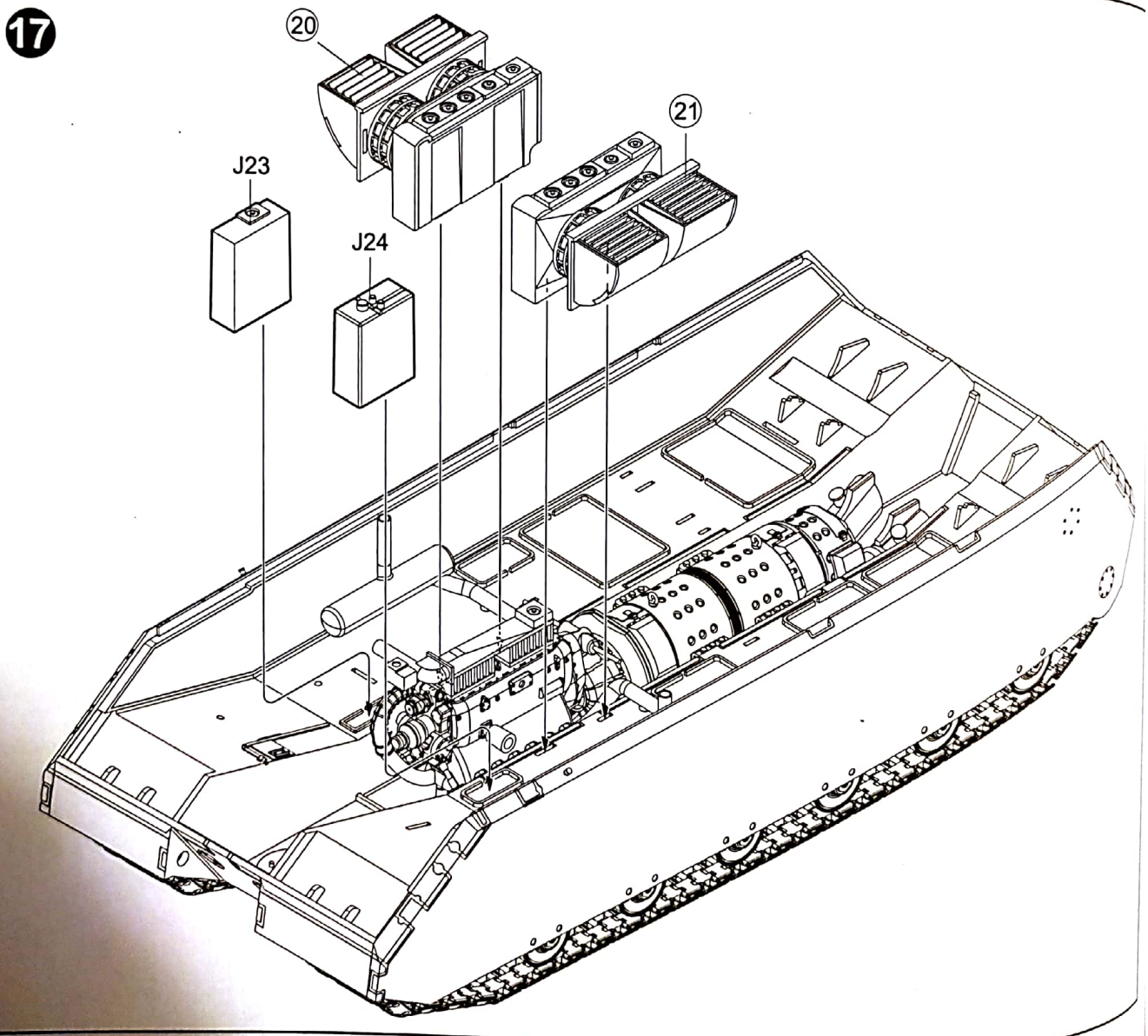

Scanned by CamScanner

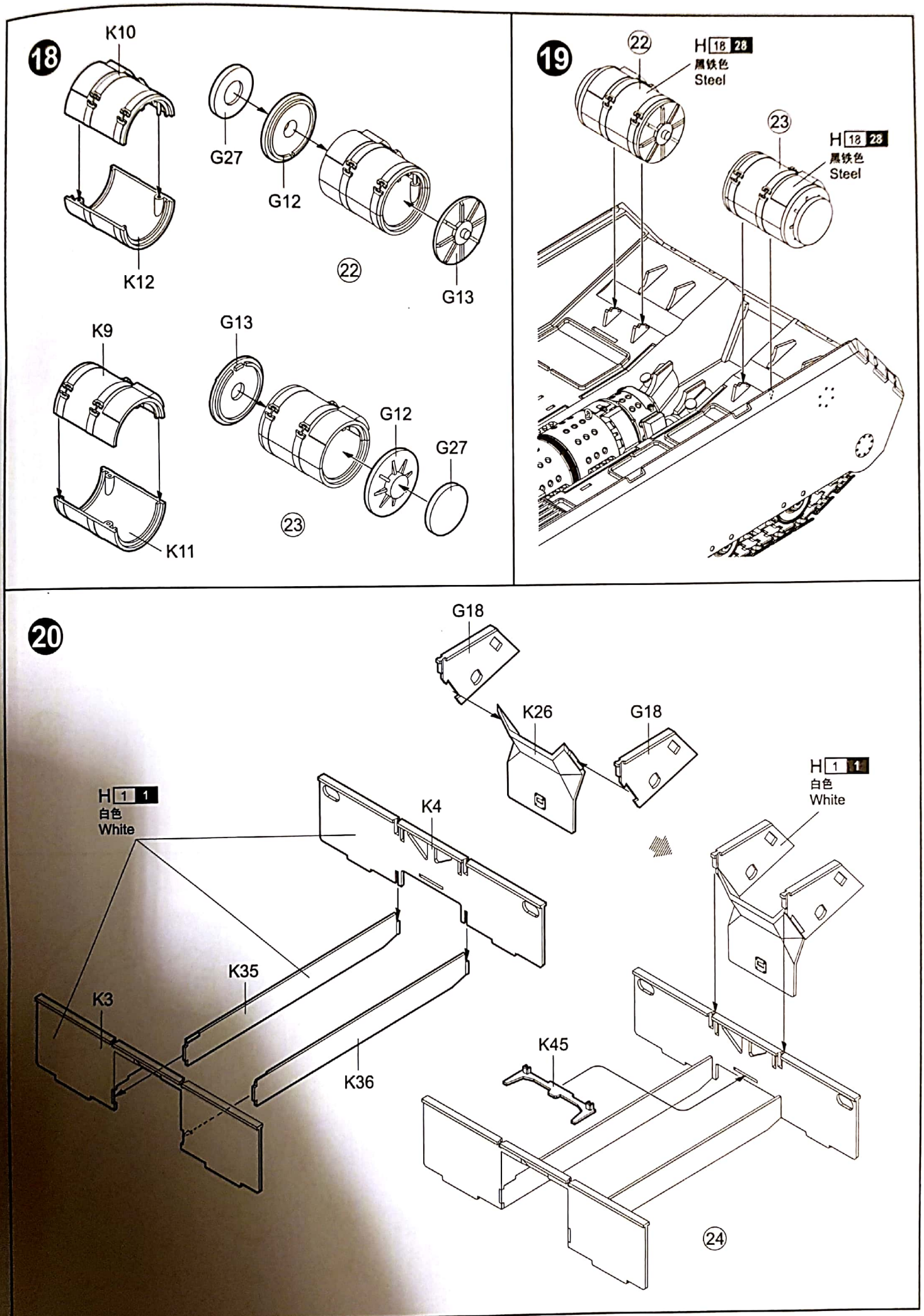

Scanned by CamScanner

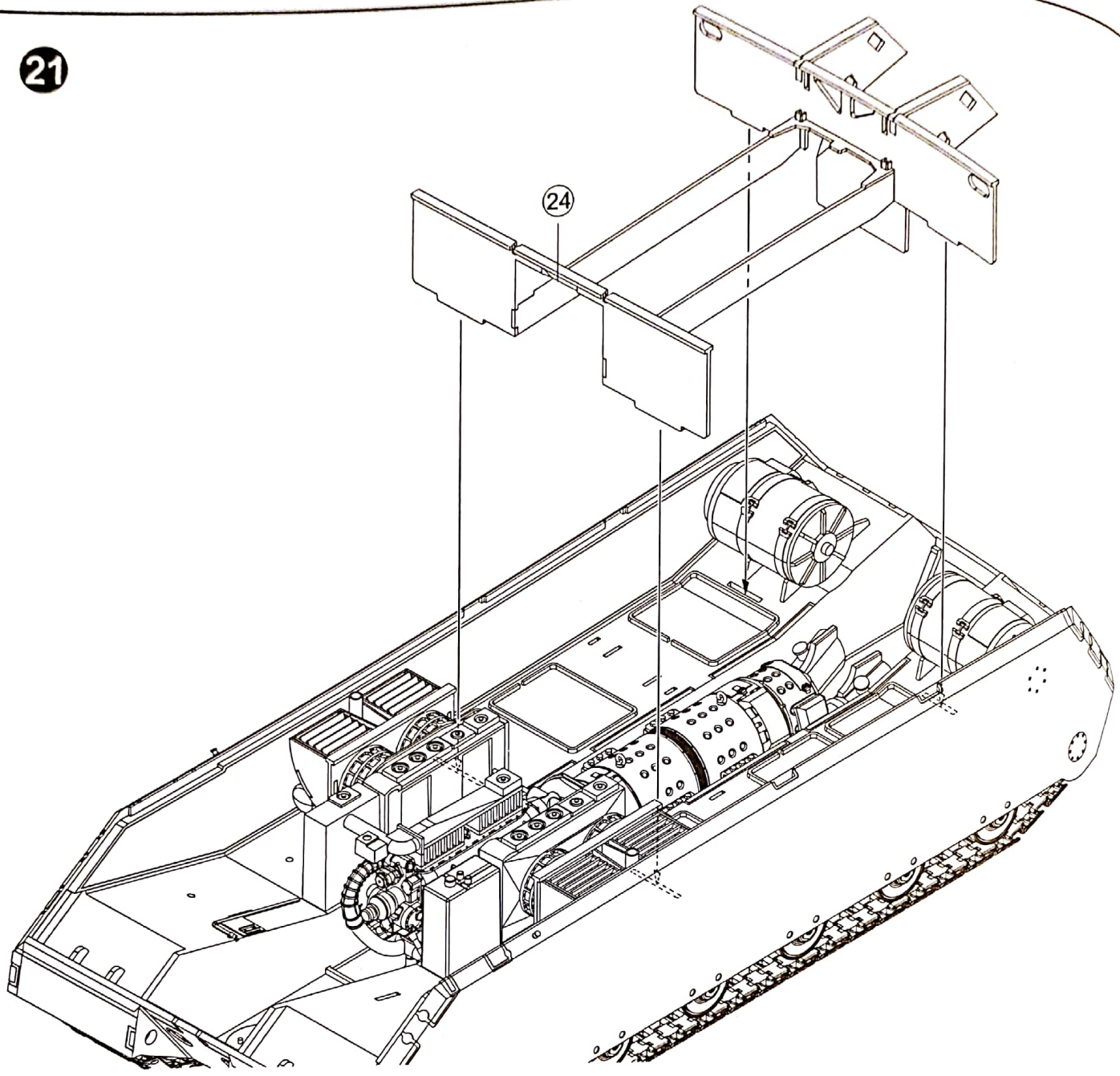

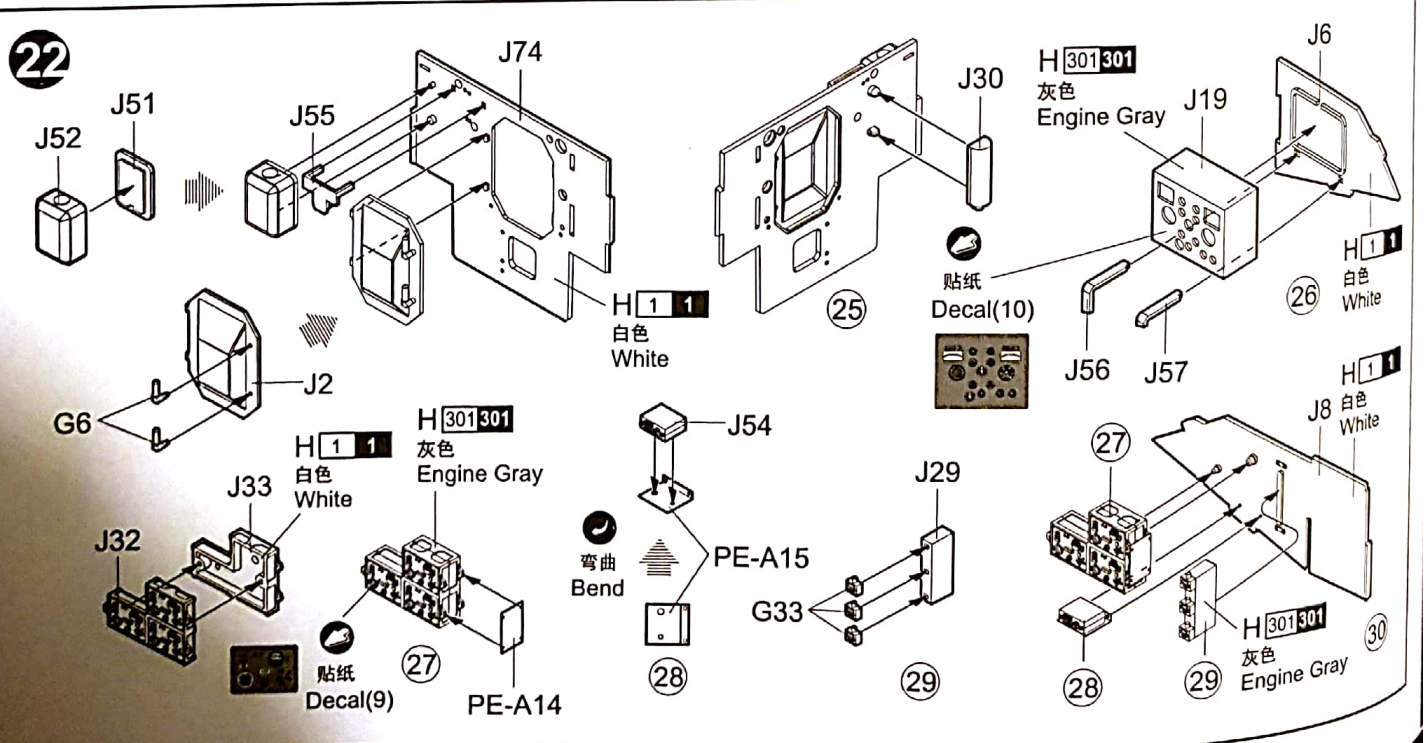

Scanned by CamScanner

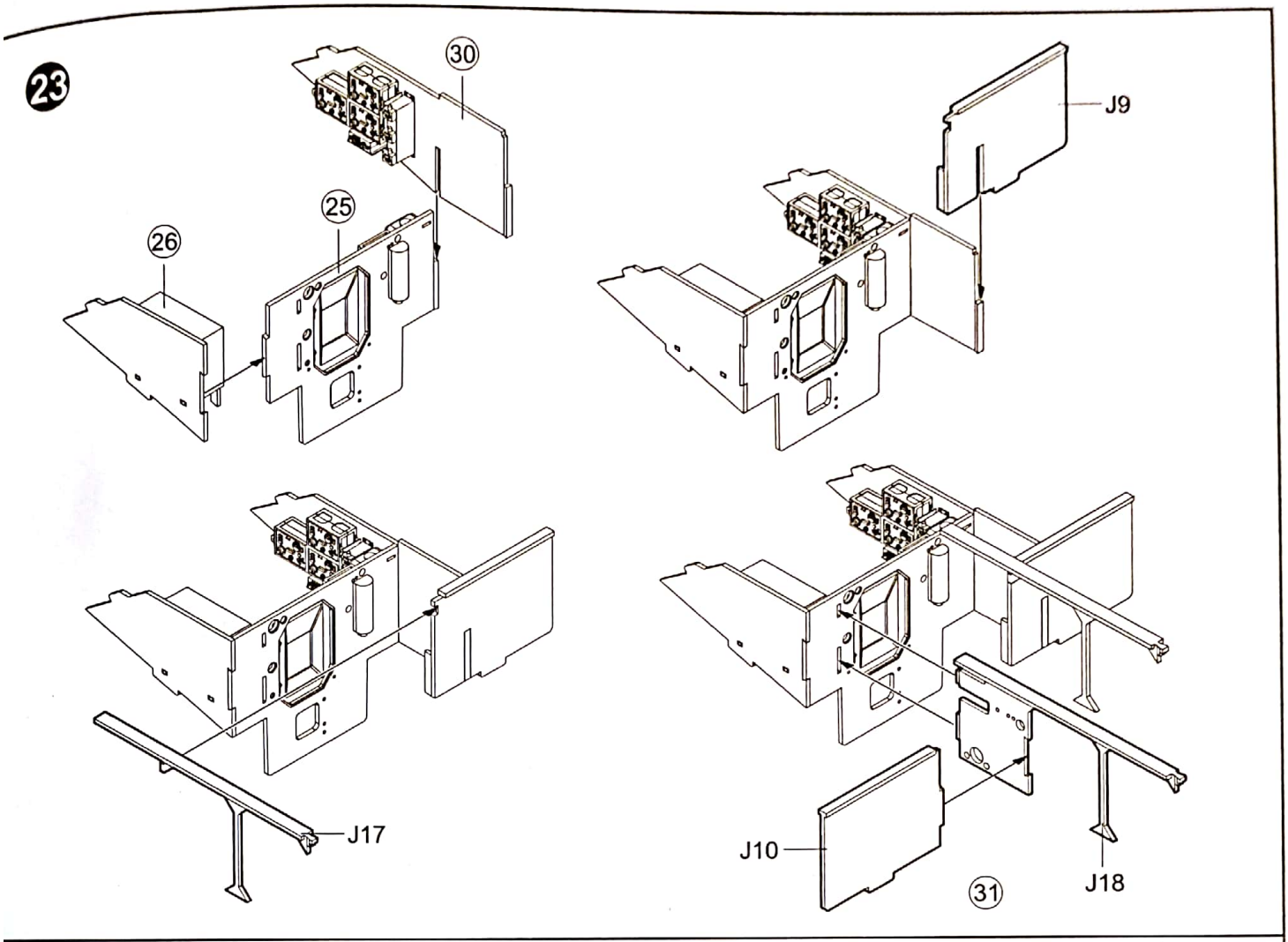

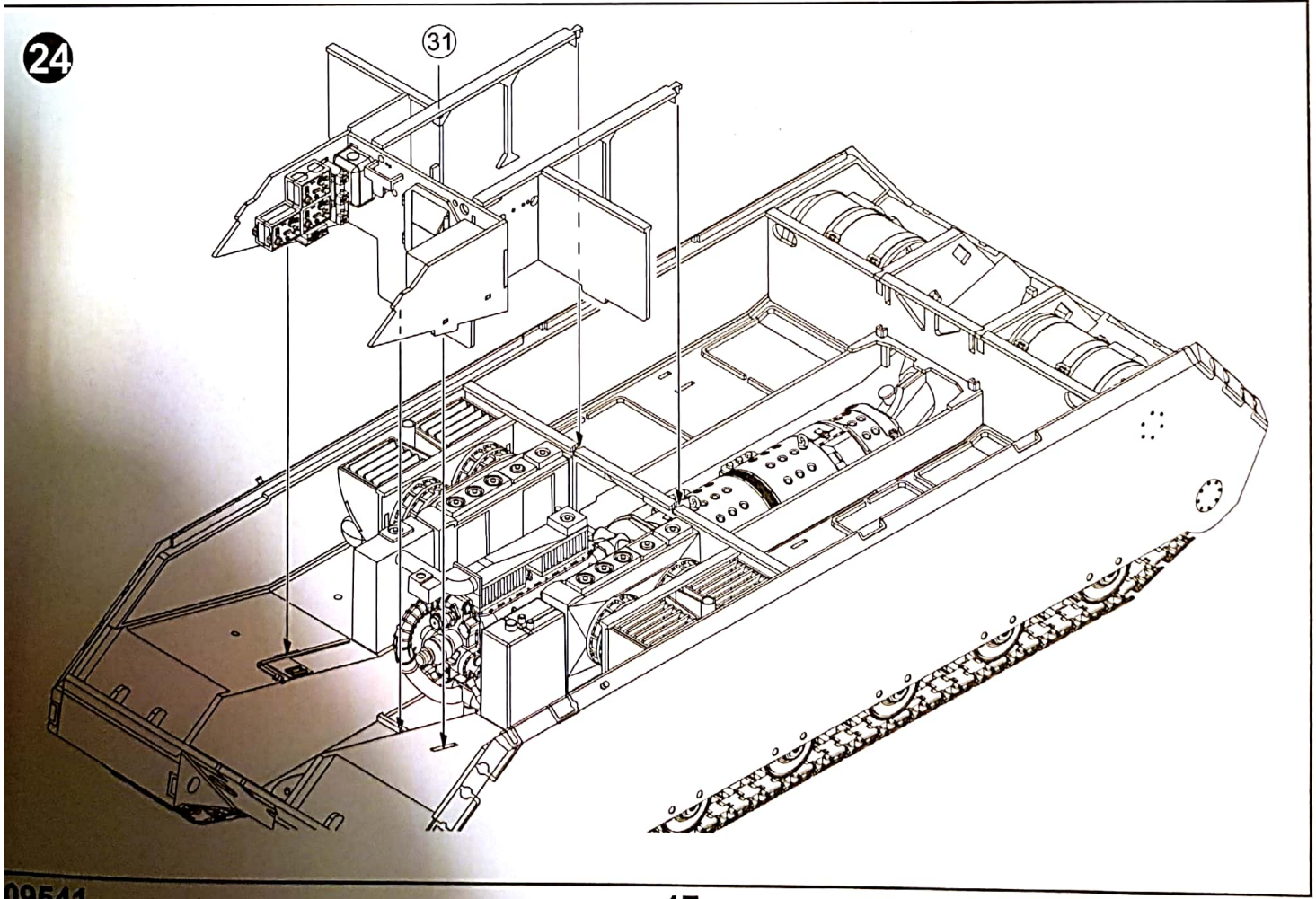

Scanned by CamScanner

29

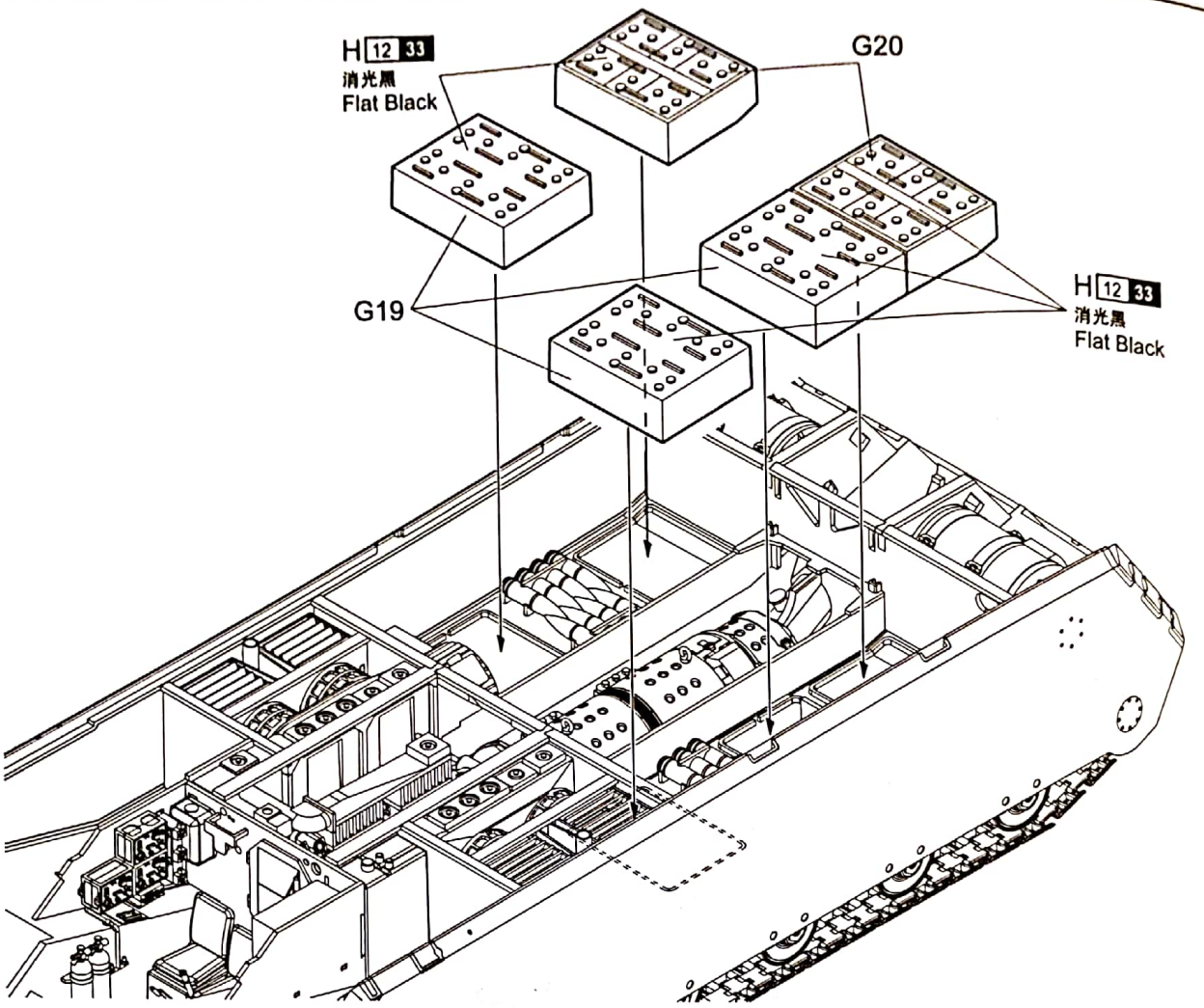

30

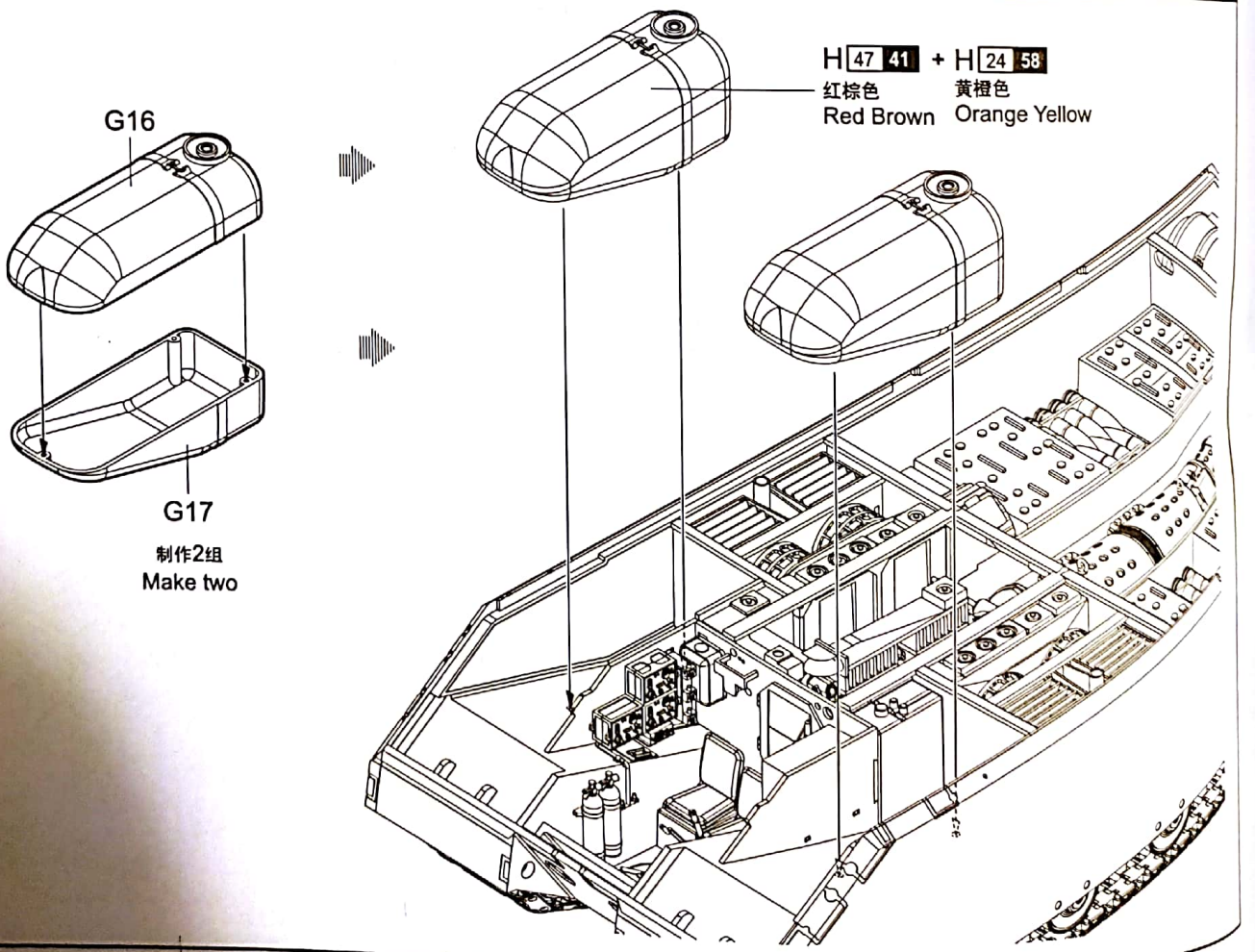

Scanned by CamScanner

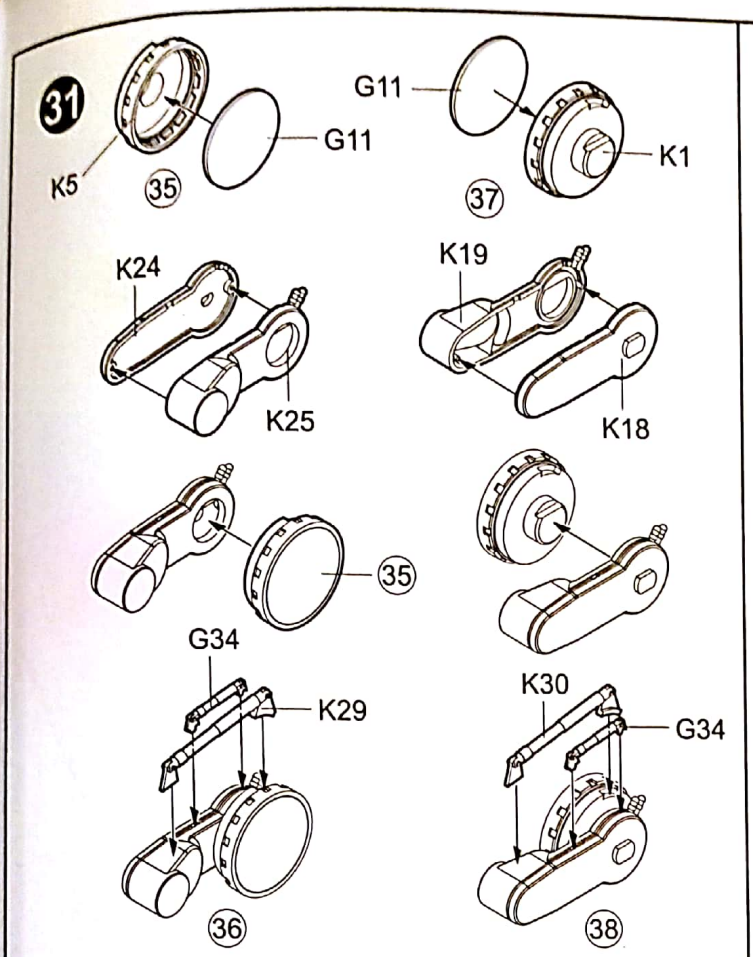

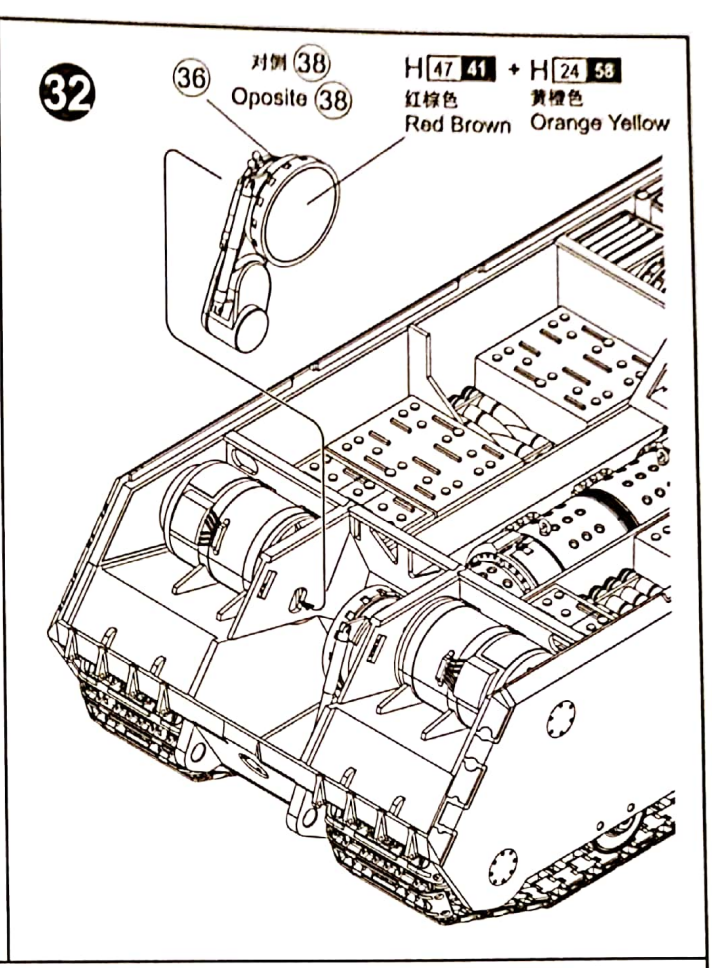

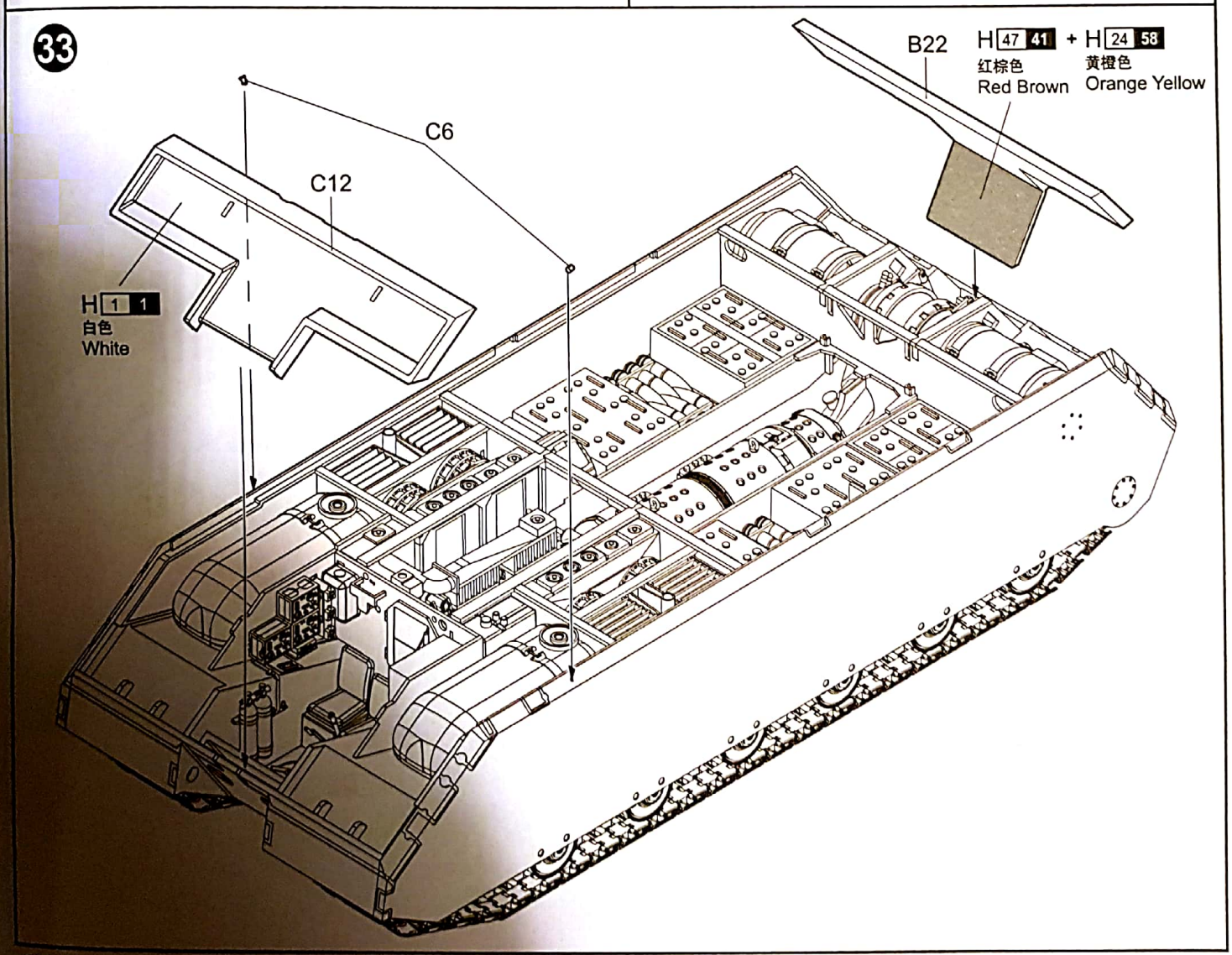

Scanned by CamScanner

36

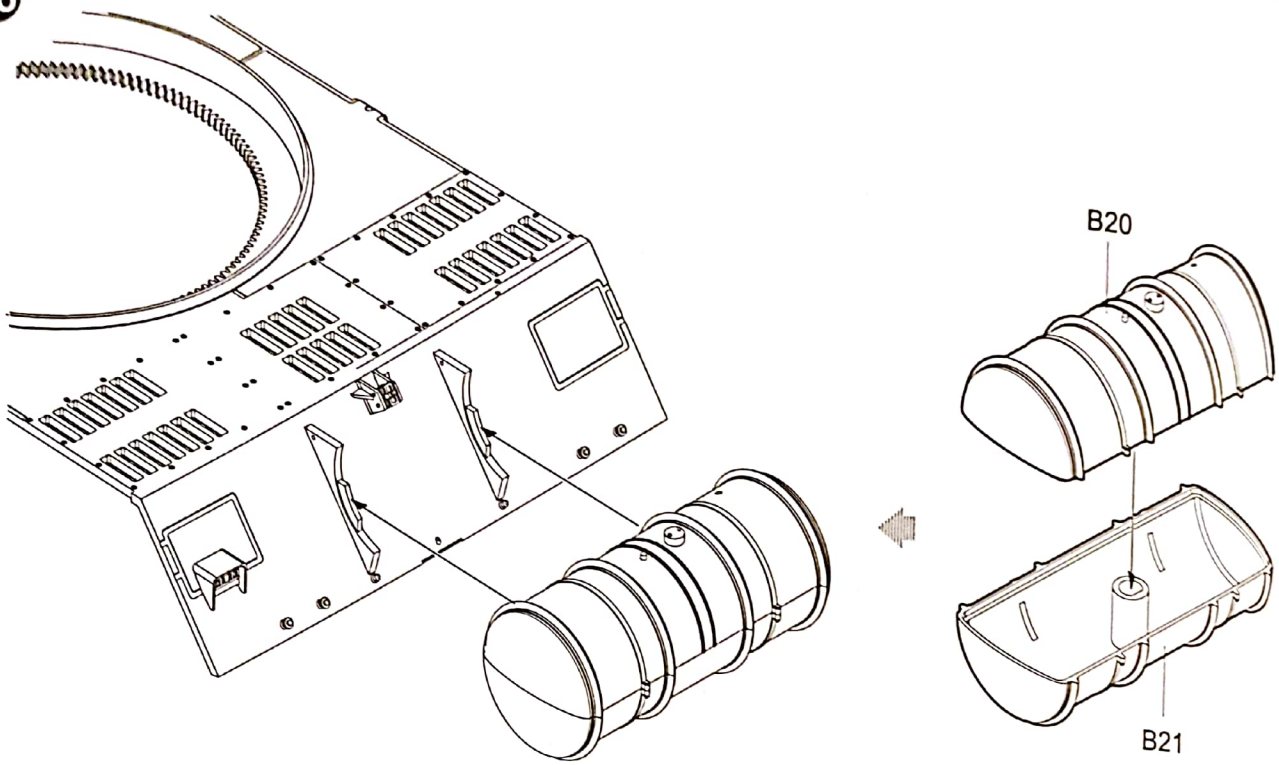

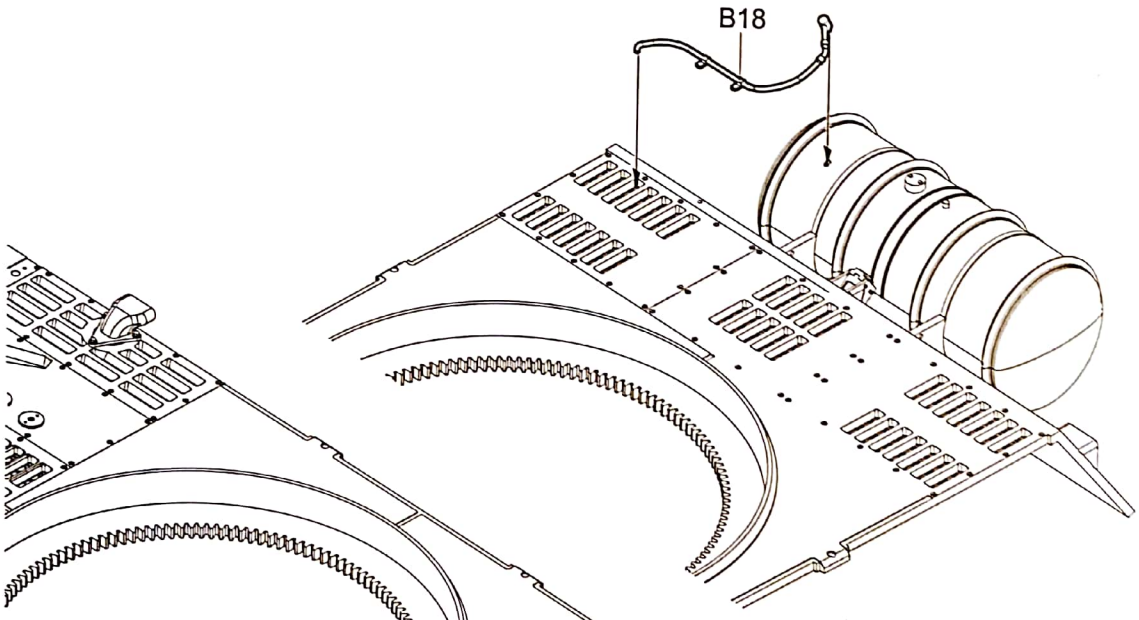

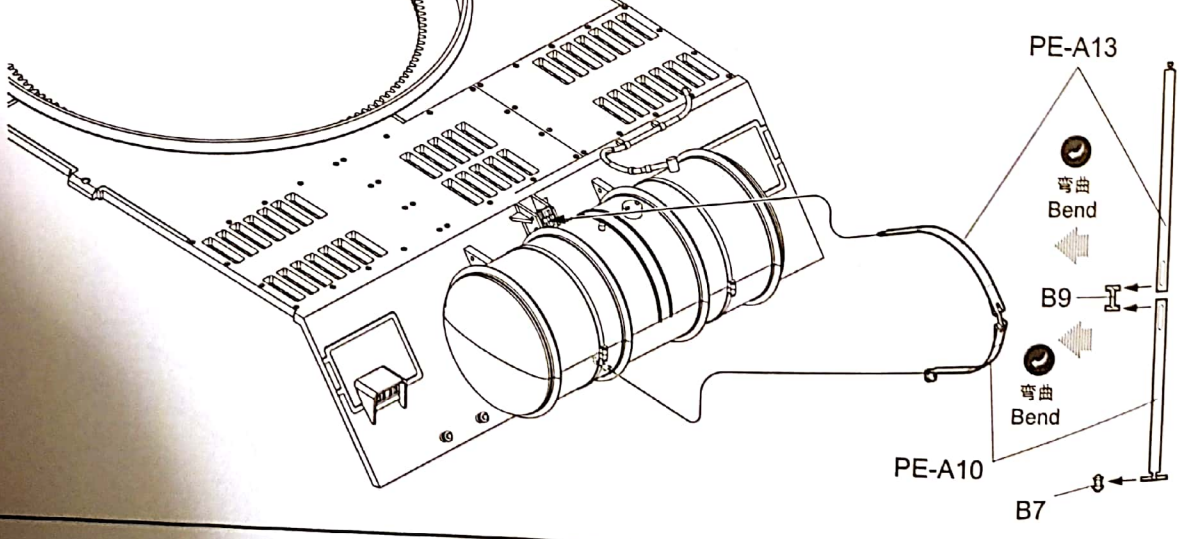

09541

Scanned by CamScanner

37 炮塔组装 Turret assembly

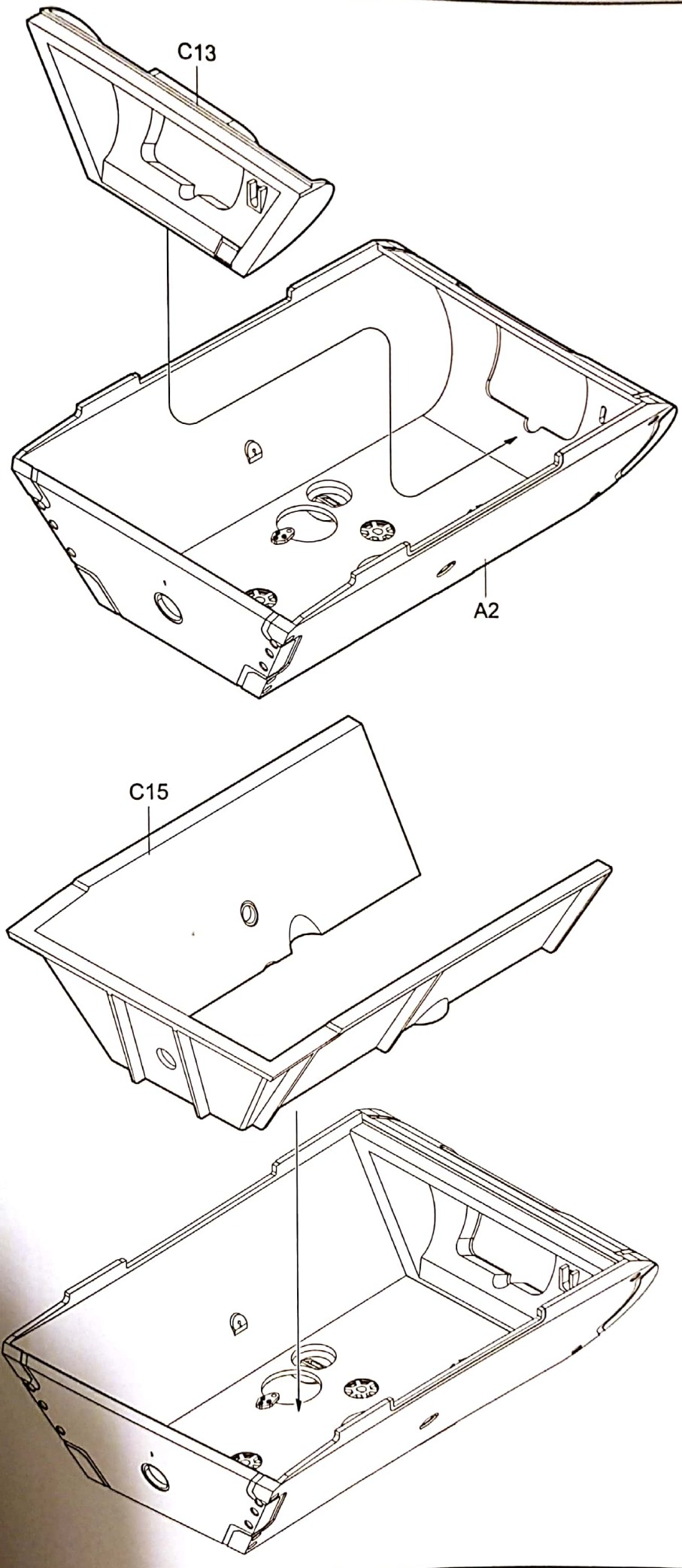

Scanned by CamScanner

38

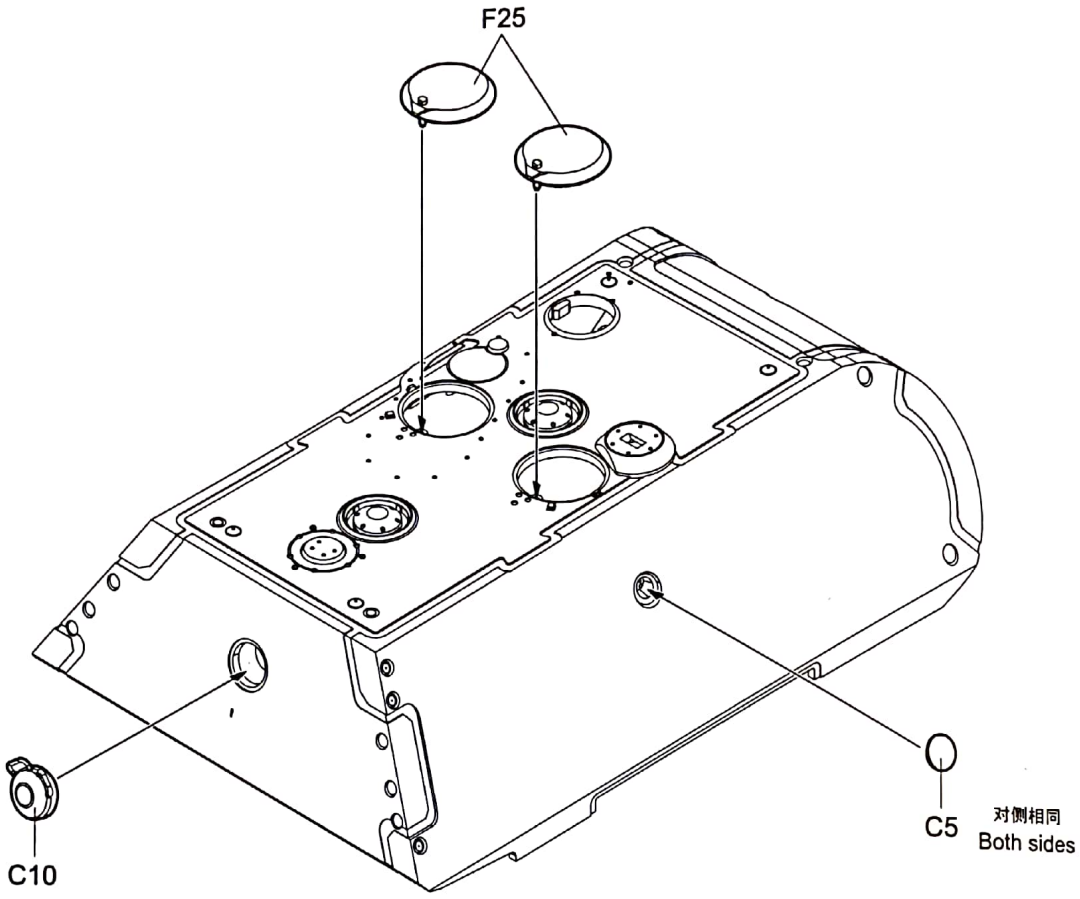

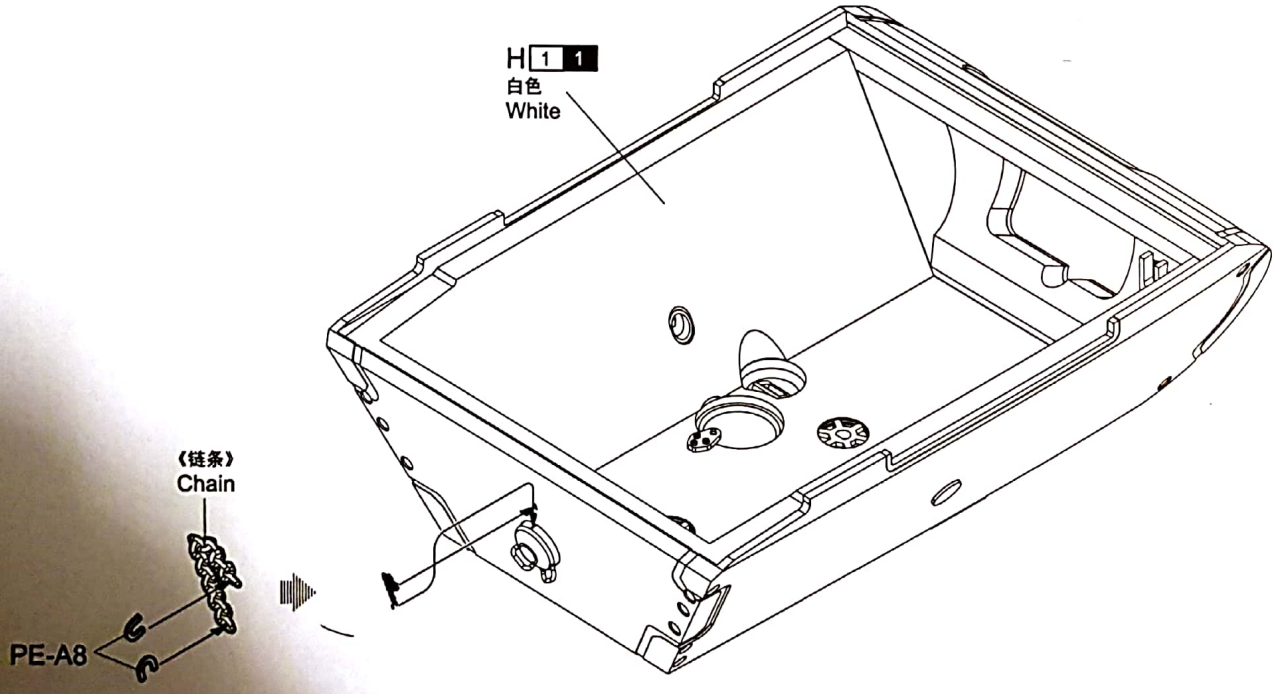

Scanned by CamScanner

39

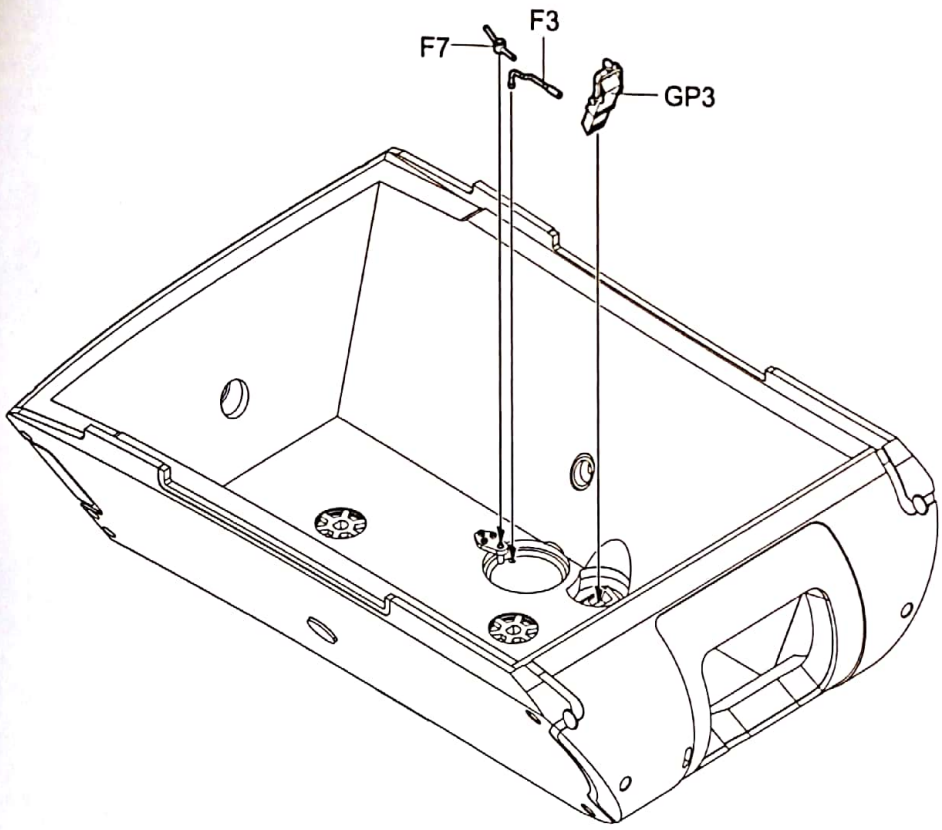

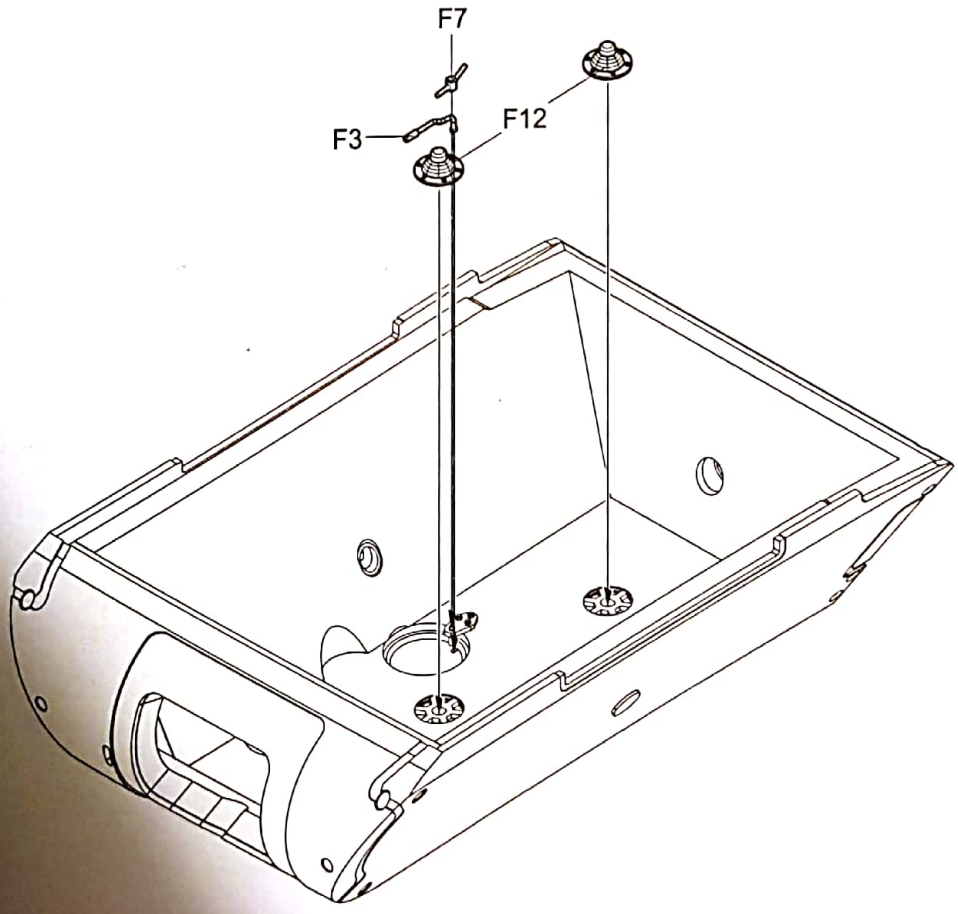

Scanned by CamScanner

40

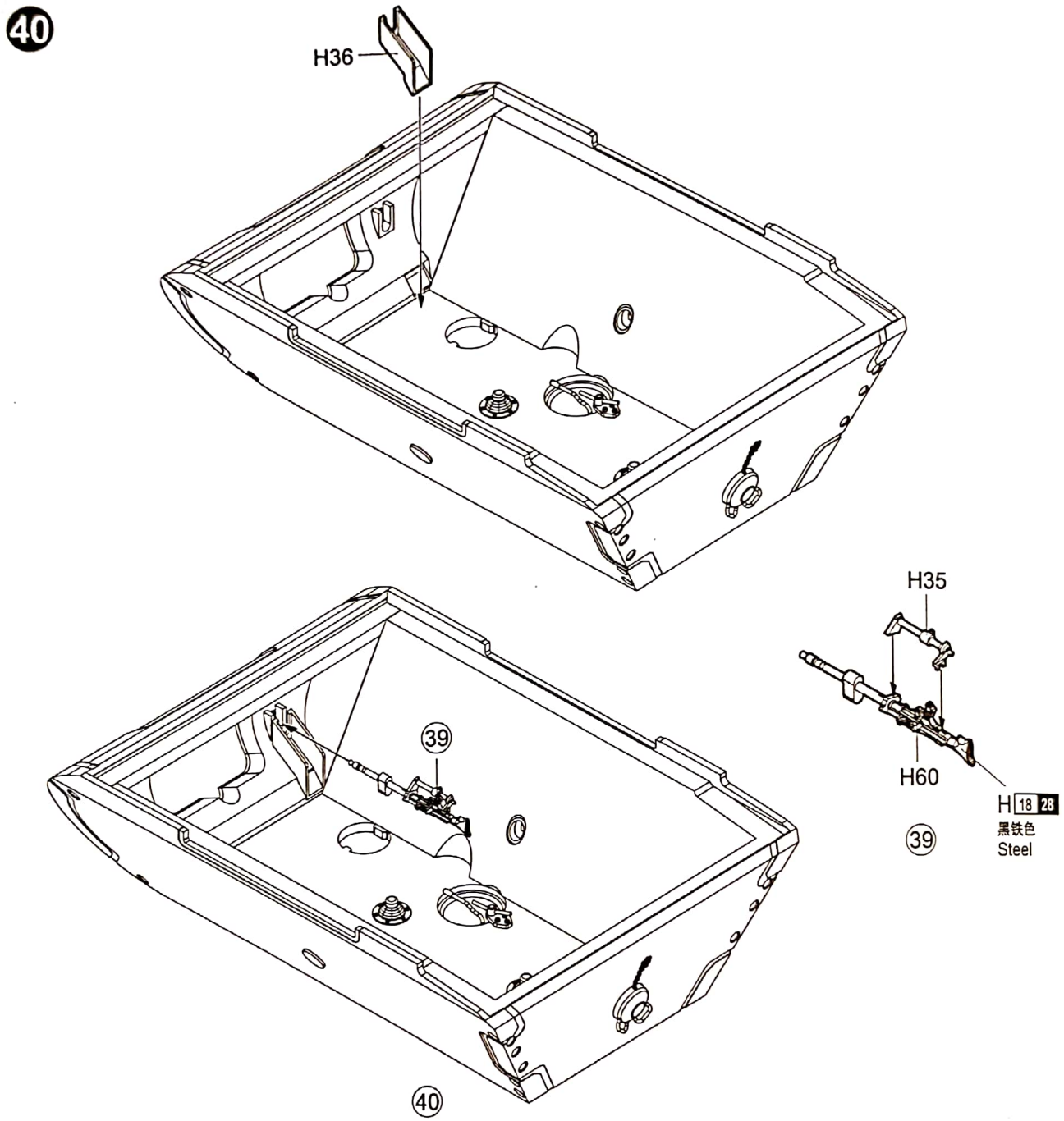

41

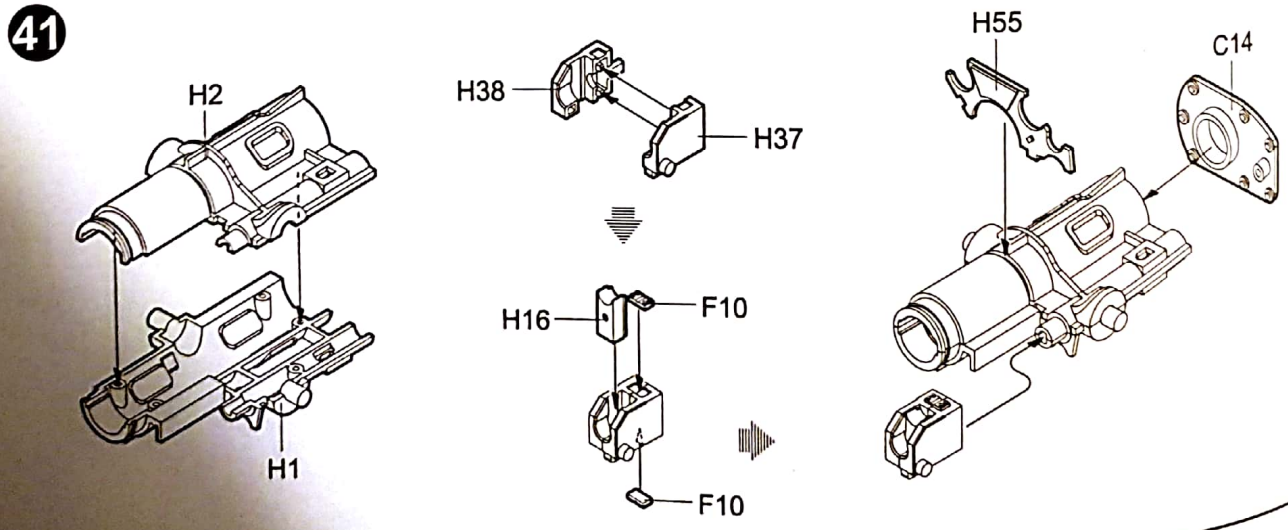

Scanned by CamScanner

42

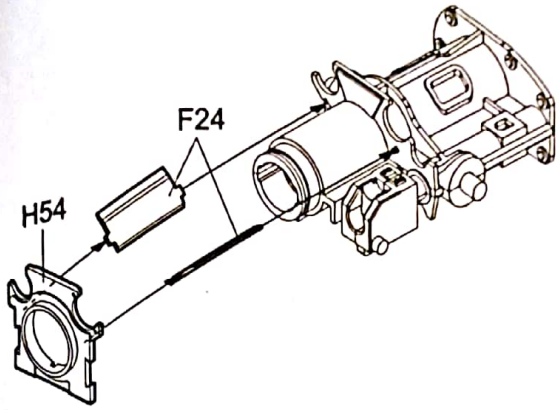

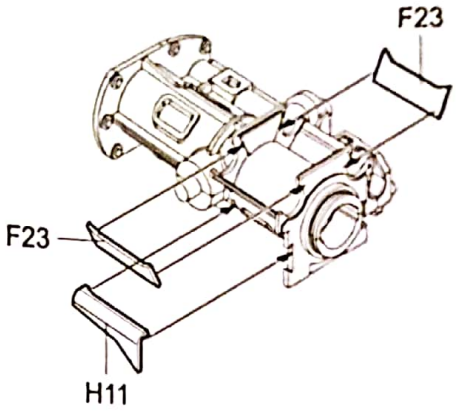

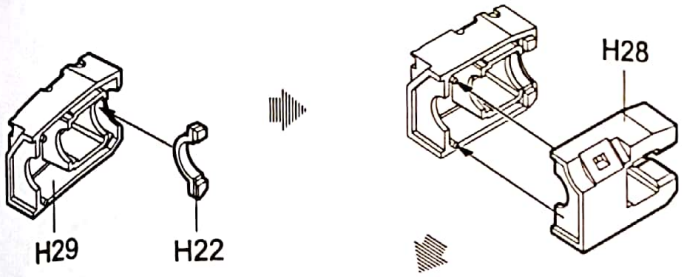

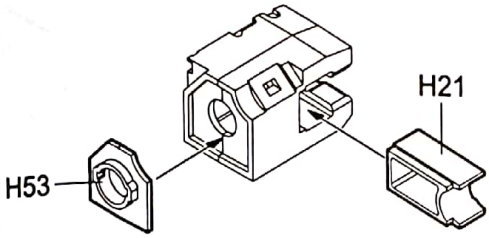

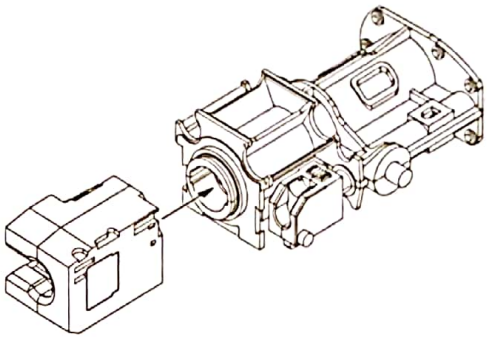

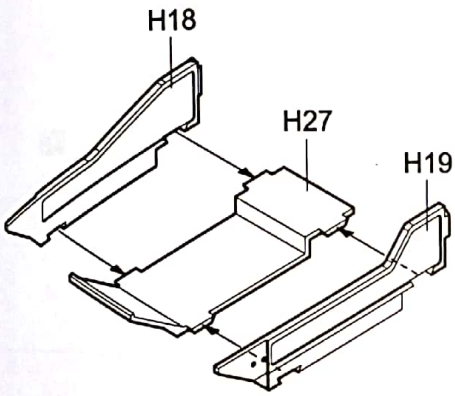

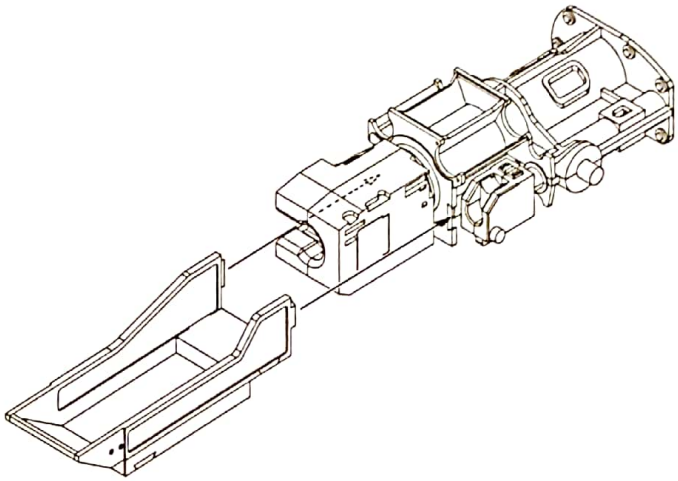

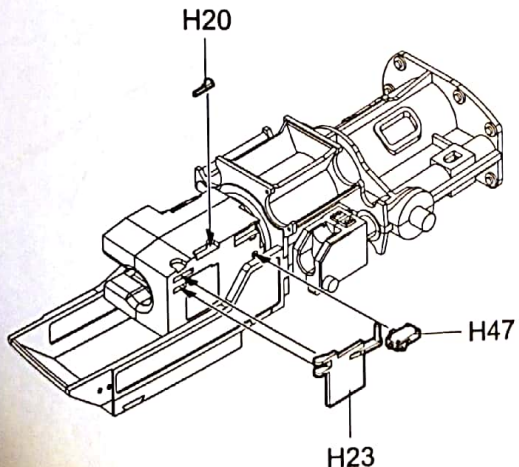

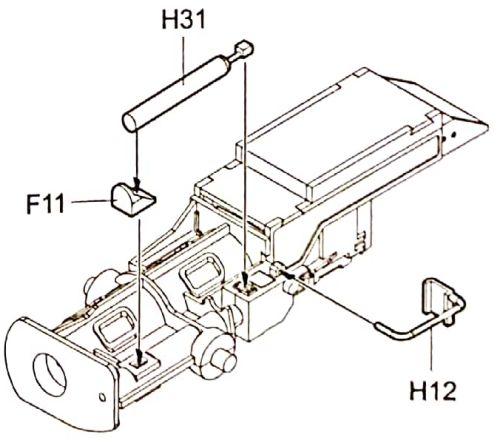

Scanned by CamScanner

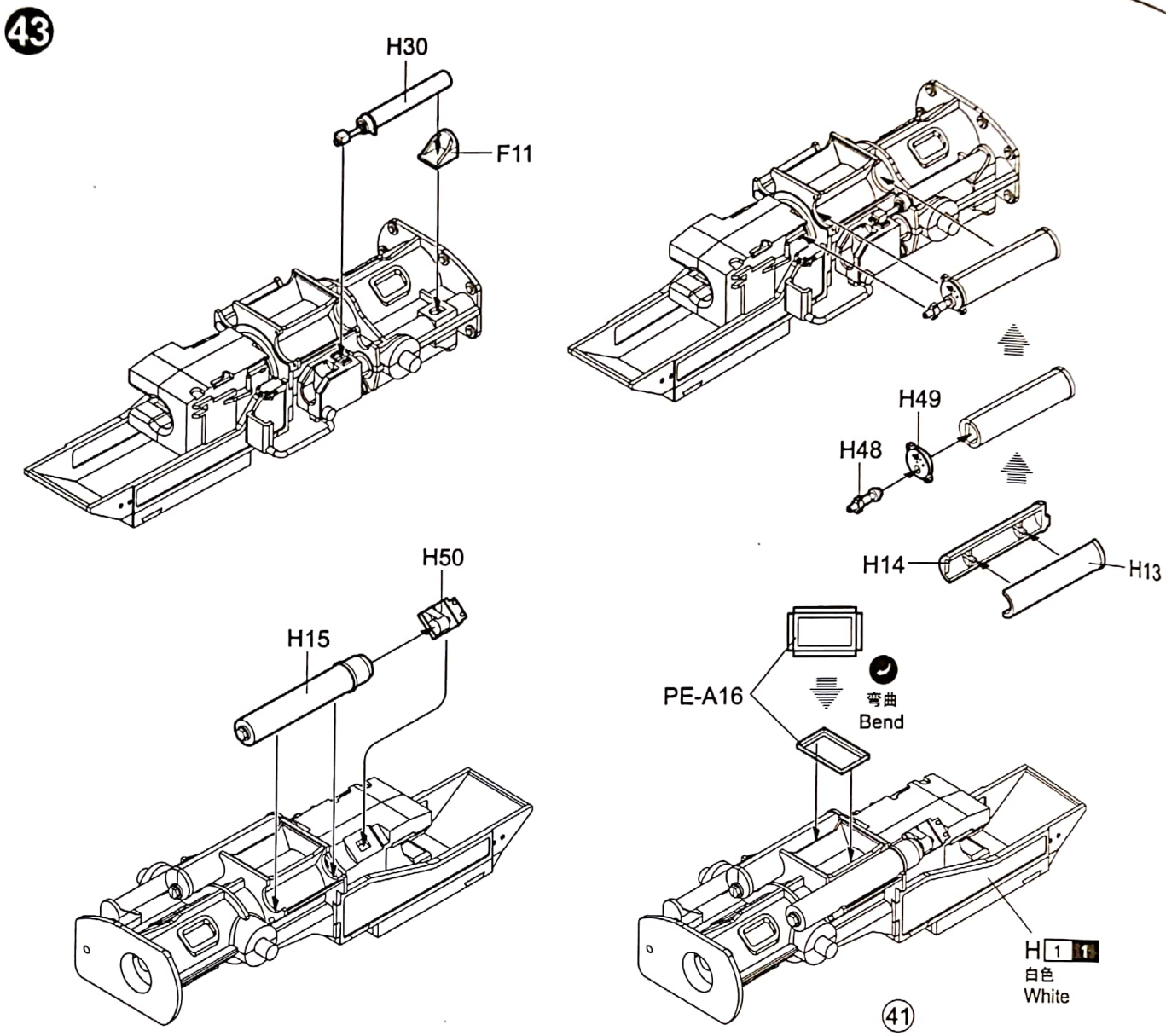

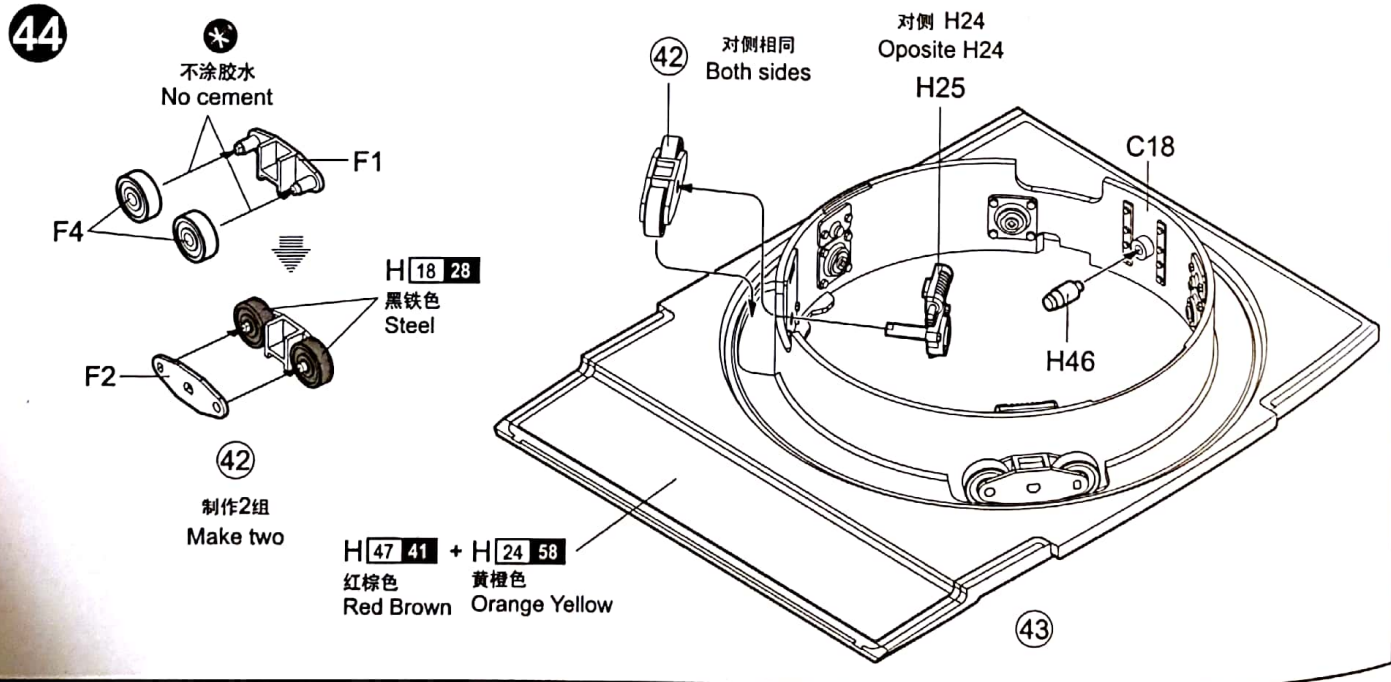

Scanned by CamScanner

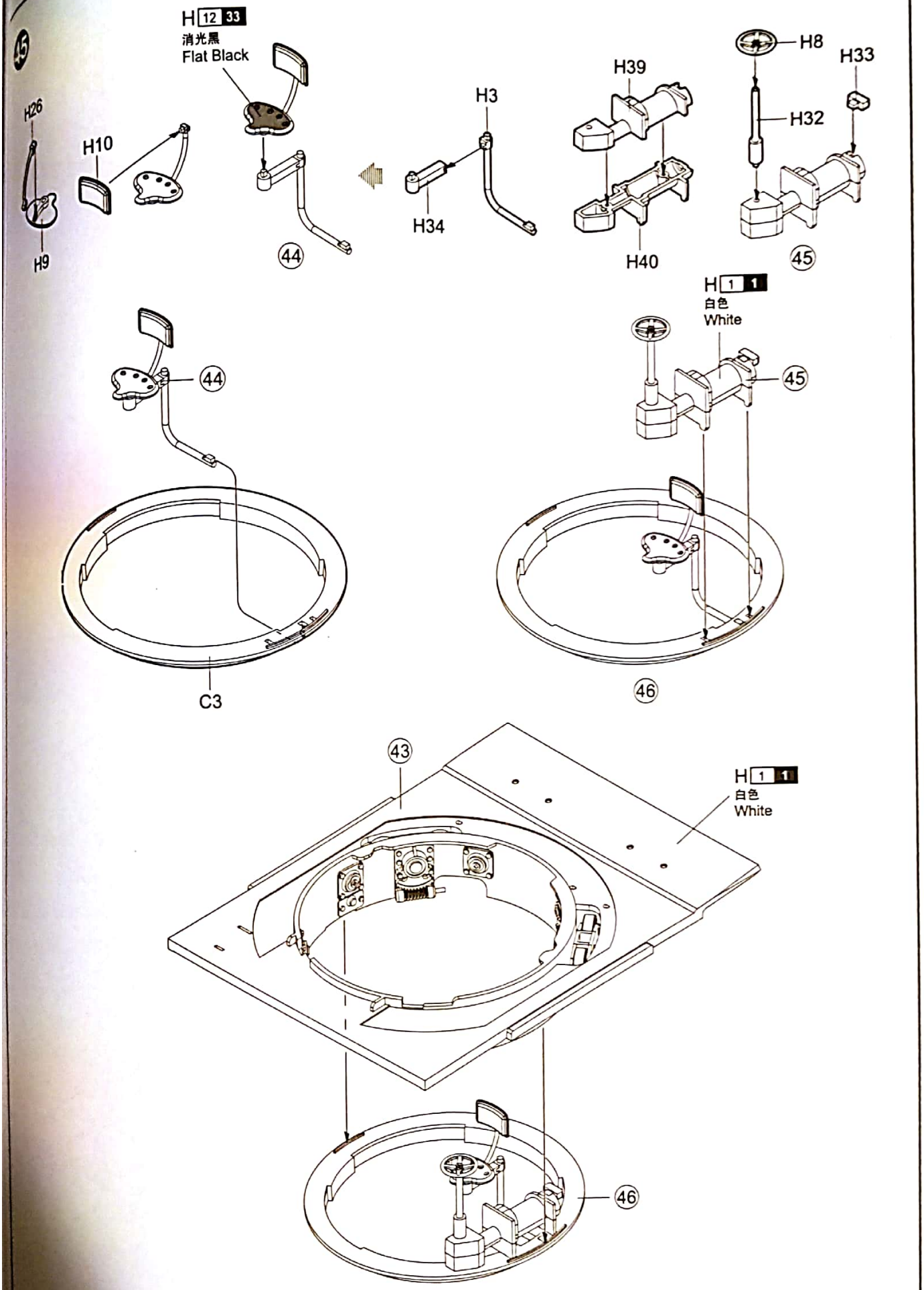

Scanned by CamScanner

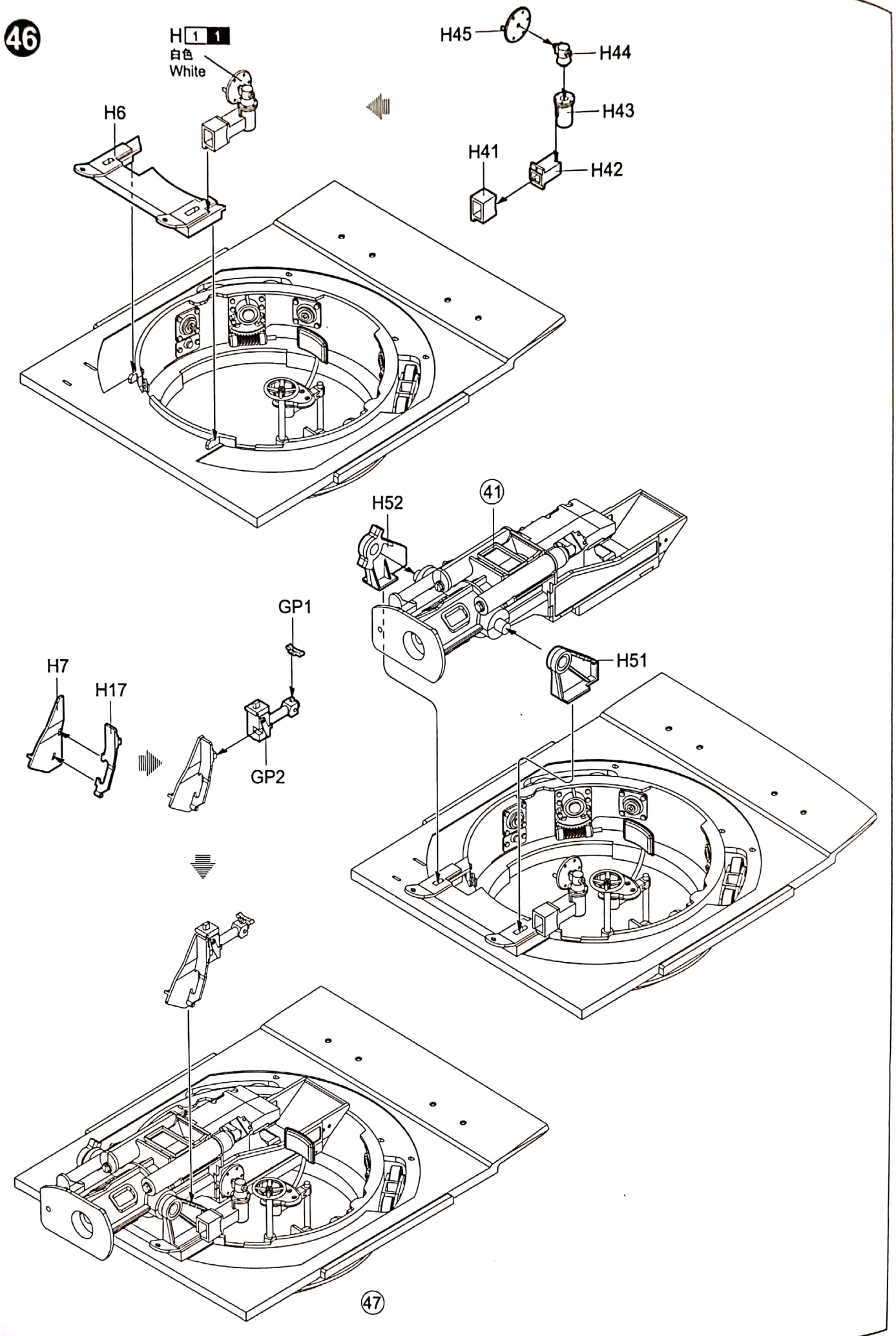

Scanned by CamScanner

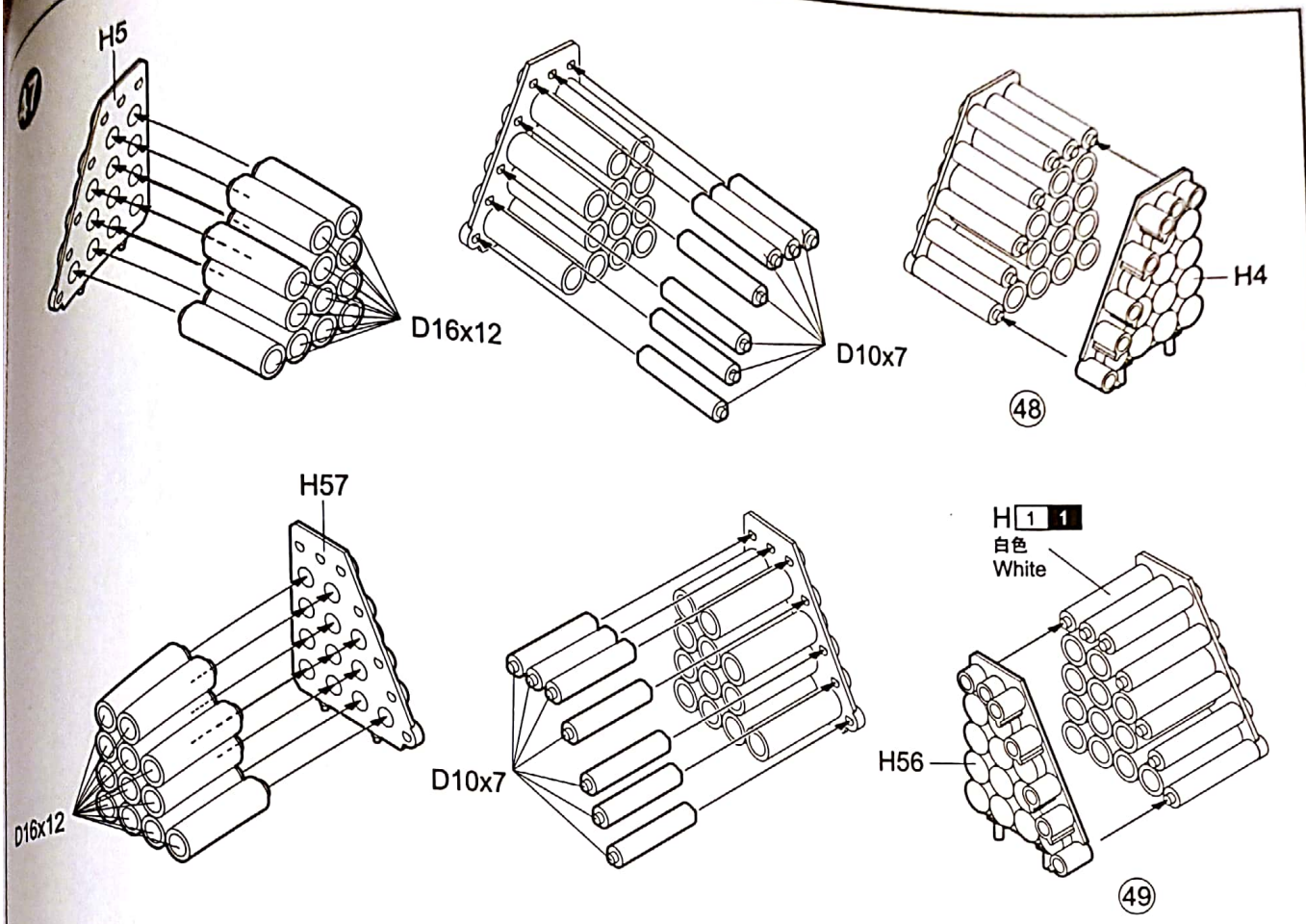

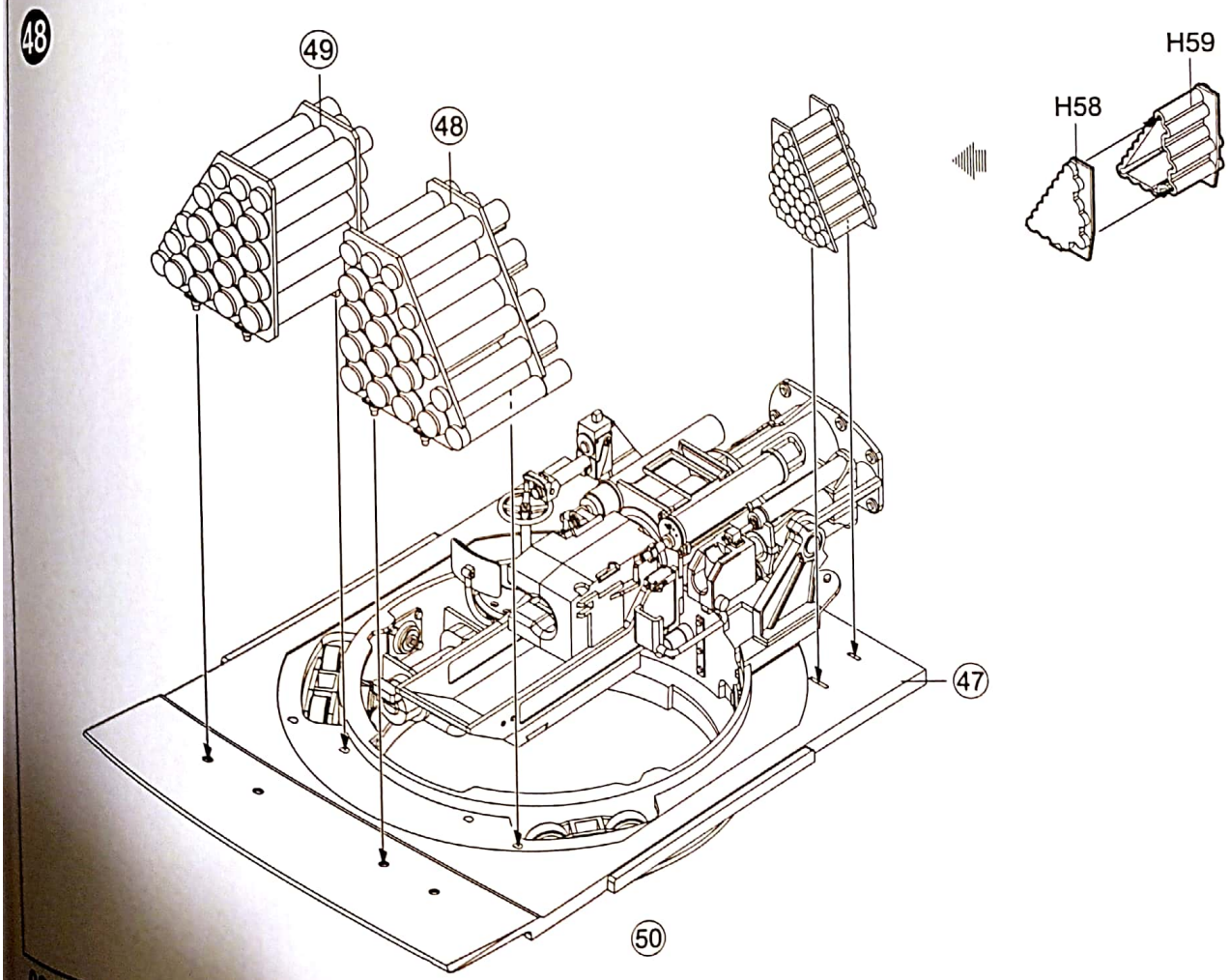

09541

Scanned by CamScanner

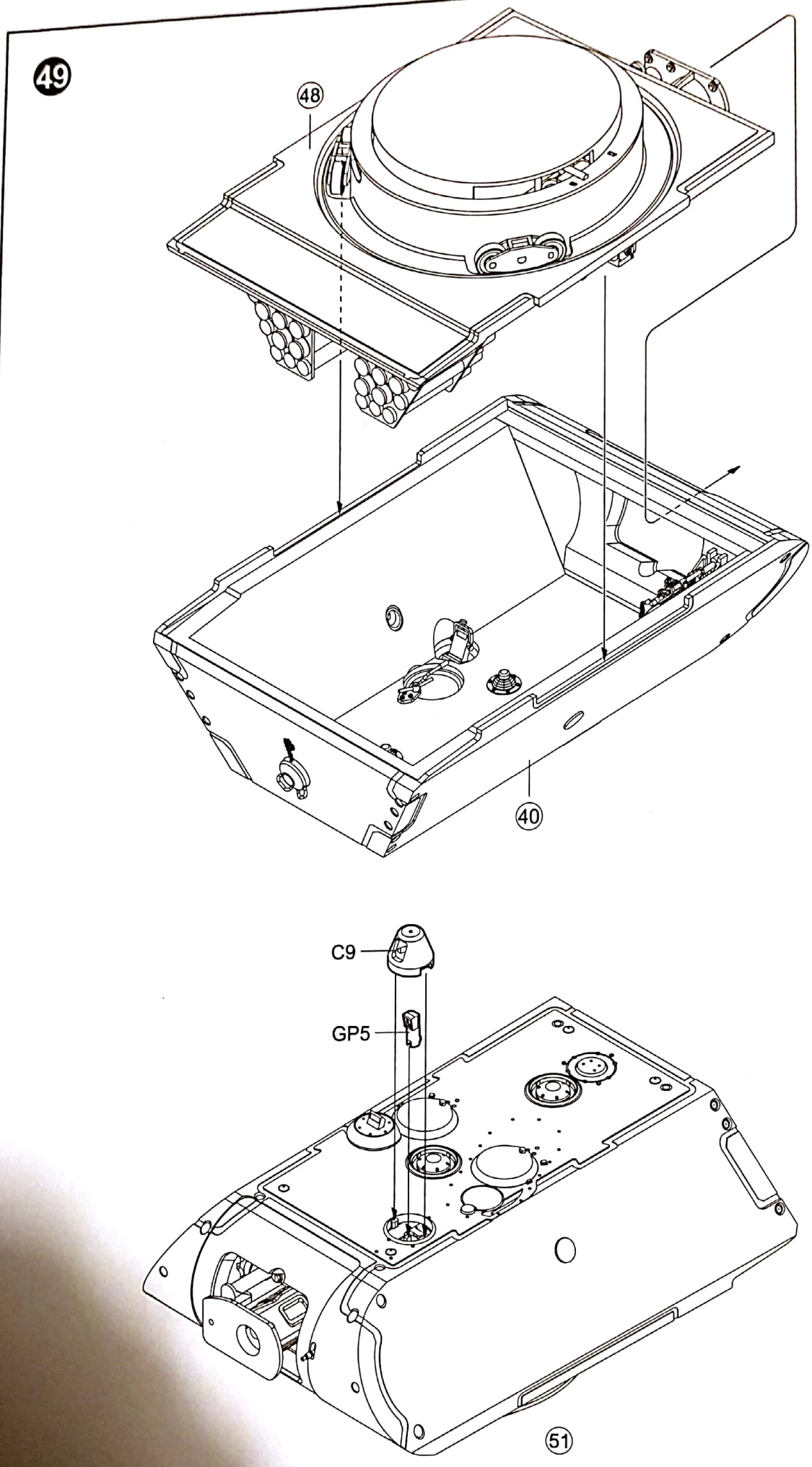

Scanned by CamScanner

50

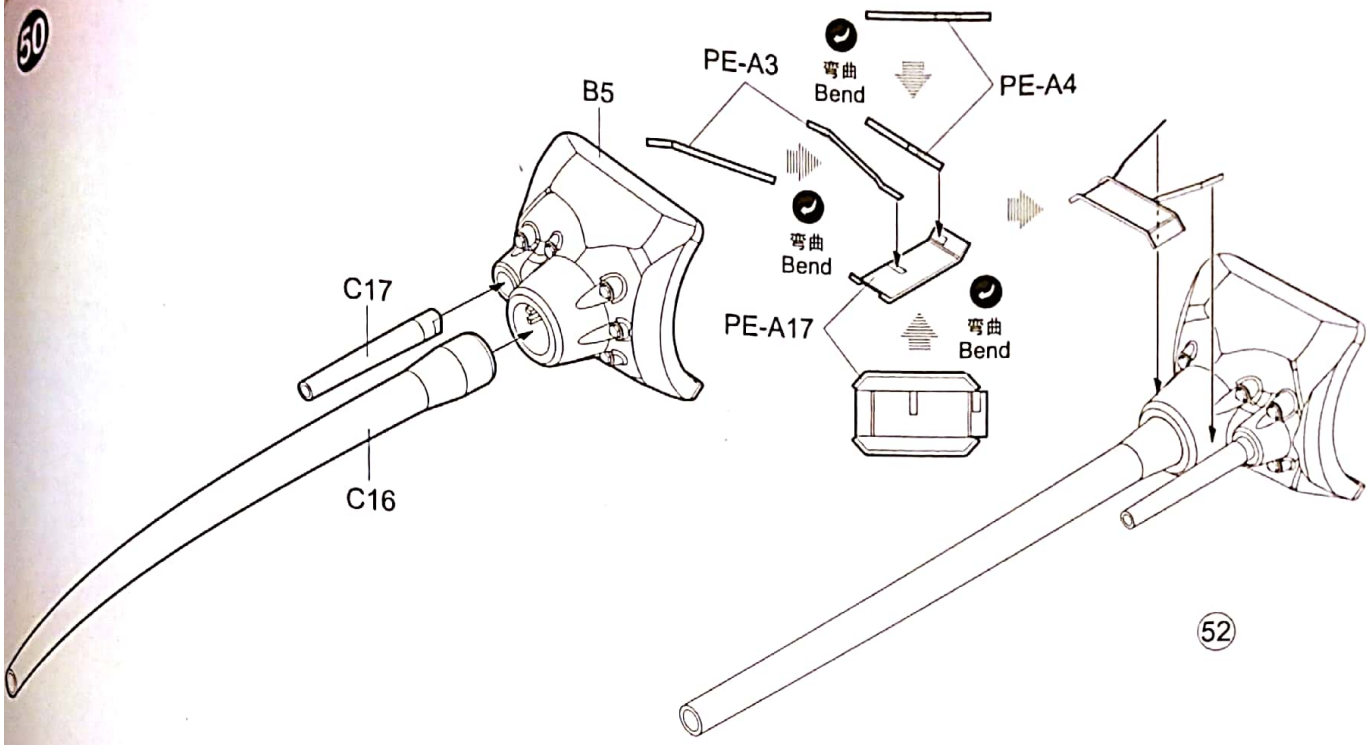

51

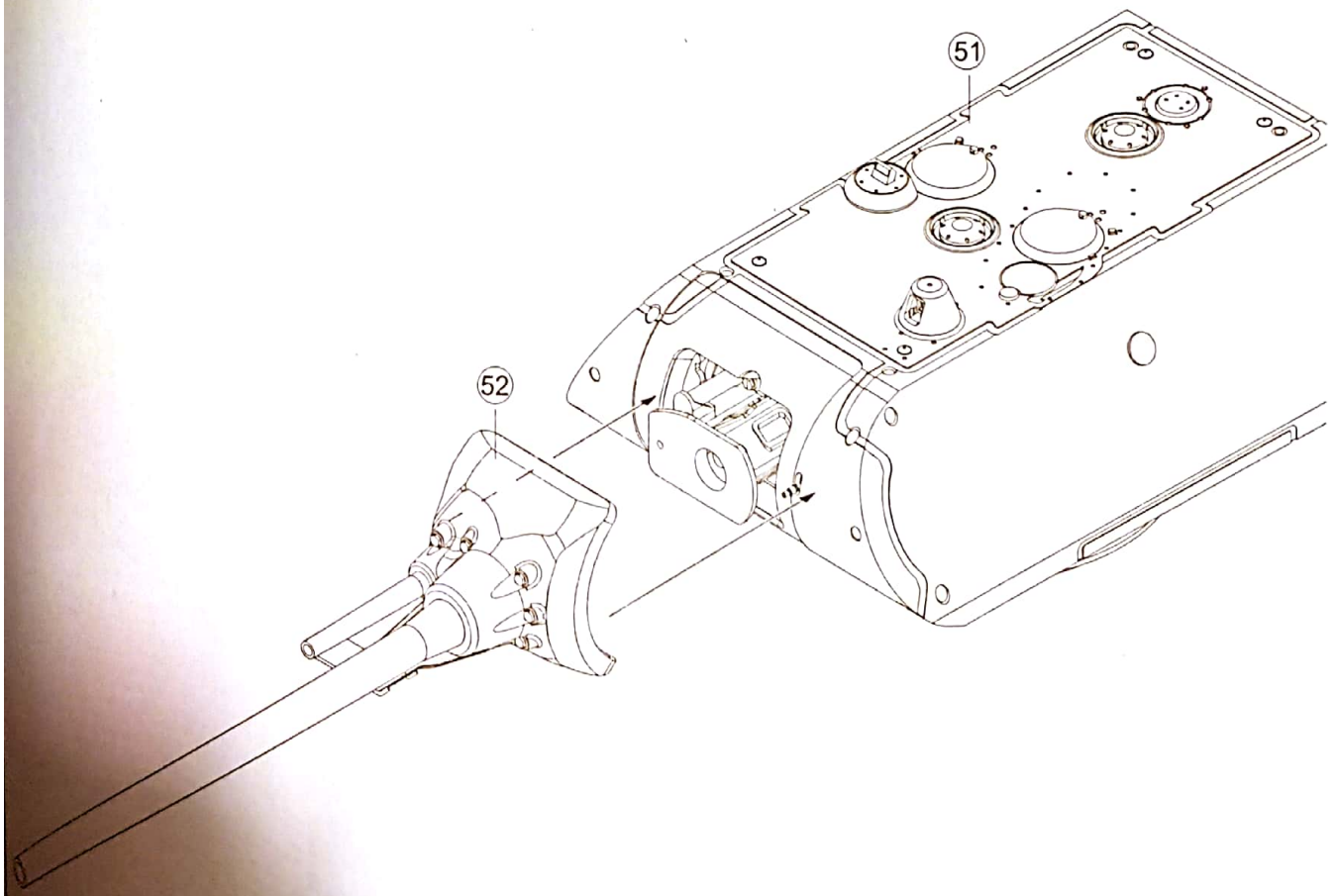

Scanned by CamScanner

52

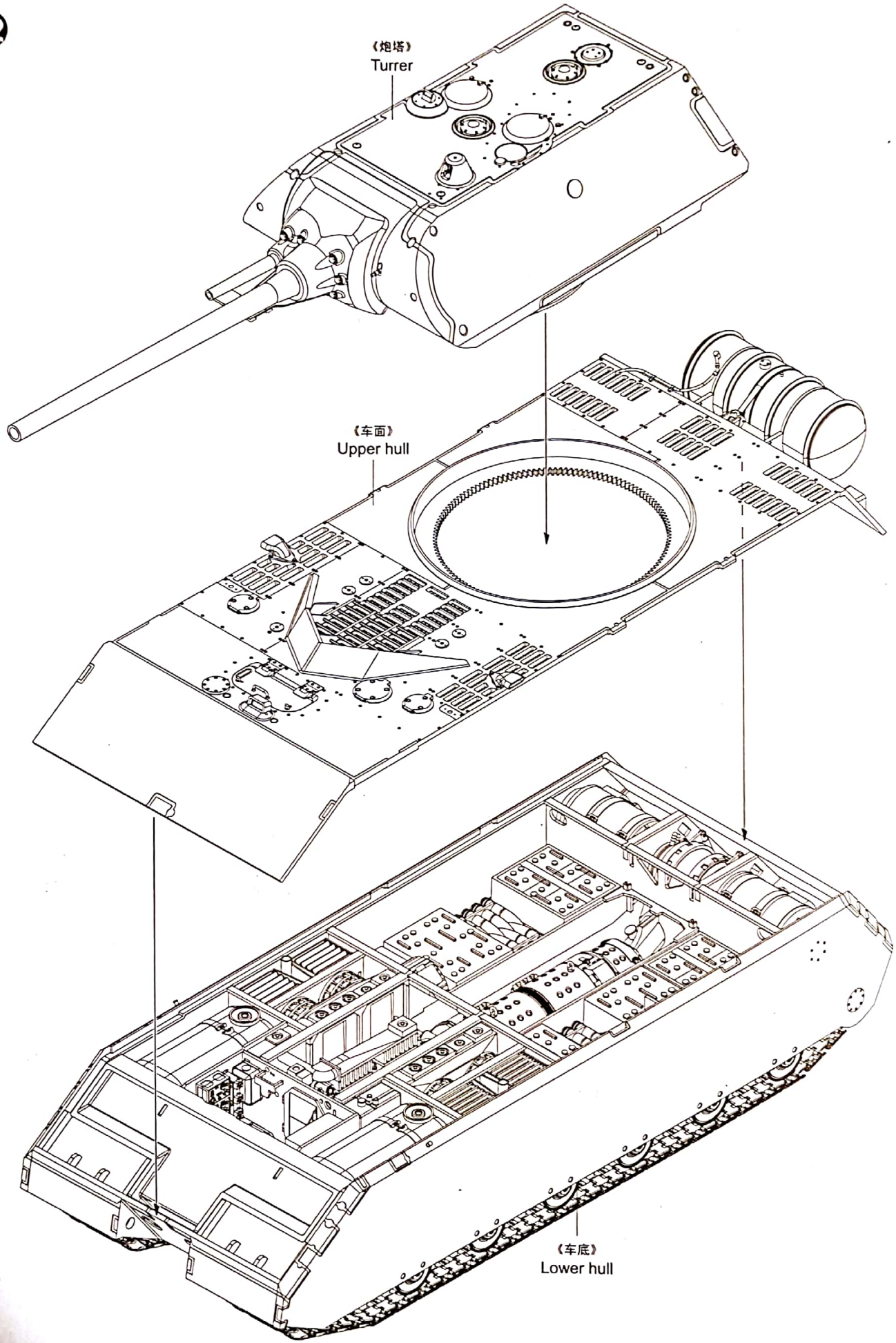

Scanned by CamScanner

涂装同标贴指示
Painting & Marking guide

PAINT REFERENCE COLOR

Color	Mr.Hobby	Acrysion	Vallejo	Model Master	Tamiya	Humbrol
Steel 黑铁色	H 18 28	N 18	864	1402	–	–
Field Gray 原野灰	H 32 40	N 32	830	–	XF22	111
Dark Green 战车绿	H 70	N	–	–	–	–
Red Brown 红棕色	H 47 41	N 47	984	–	XF64	160
Burnt Iron 烧铁色	H 76 61	N 76	863	1795	X10	53
Khaki Green 卡其绿	H 80 54	N 80	924	–	XF51	159
Sandy Yellow 砂黄色	H 79 39	N 79	824	–	XF59	93

B

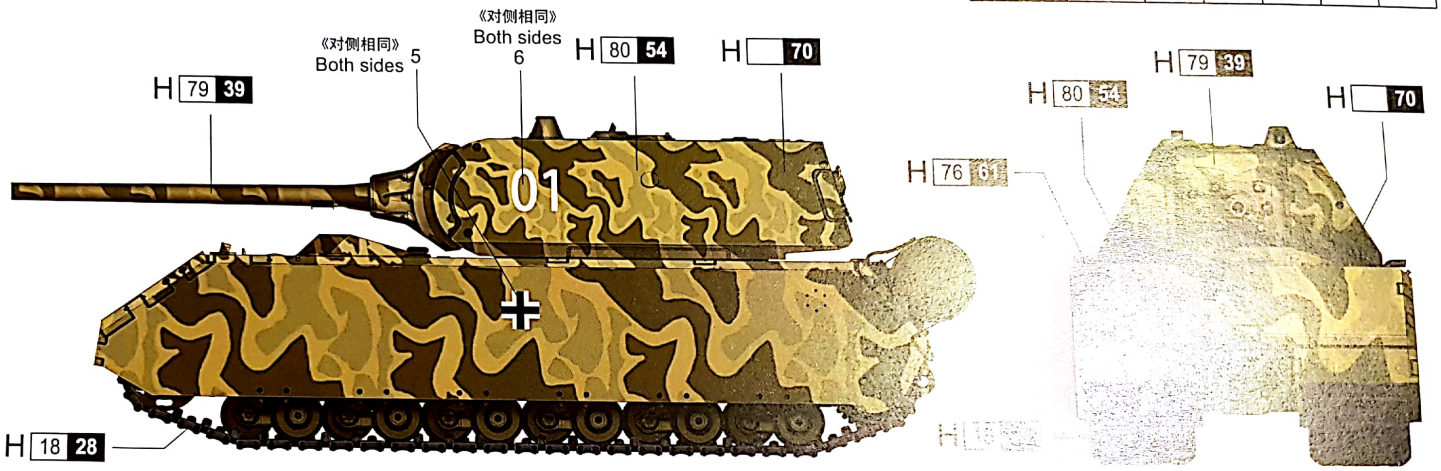

C

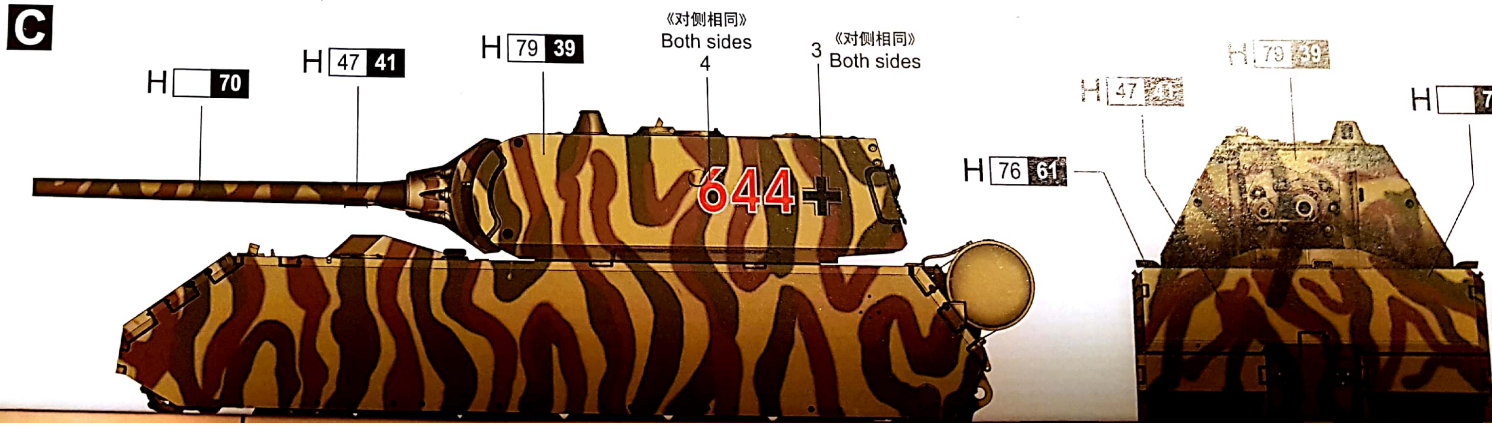

Scanned by CamScanner

Scanned by CamScanner

涂装同标贴指示
Painting & Marking guide

A

PAINT REFERENCE COLOR

Color	Mr.Hobby	Acrysion	Vallejo	Model Master	Tamiya	Humbrol	Color	Mr.Hobby	Acrysion	Vallejo	Model Master	Tamiya	Humbrol
Steel 黑铁色	H 18 **28**	N 18	864	1402	–	–	Red Brown 红棕色	H 47 **41**	N 47	984	–	XF64	160
Field Gray 原野灰	H 32 **40**	N 32	830	–	XF22	111	Burnt Iron 烧铁色	H 76 **61**	N 76	863	1795	X10	53
Dark Green 战车绿	H □ **70**	N □	–	–	–	–	Khaki Green 卡其绿	H 80 **54**	N 80	924	–	XF51	159
							Sandy Yellow 砂黄色	H 79 **39**	N 79	824	–	XF59	93

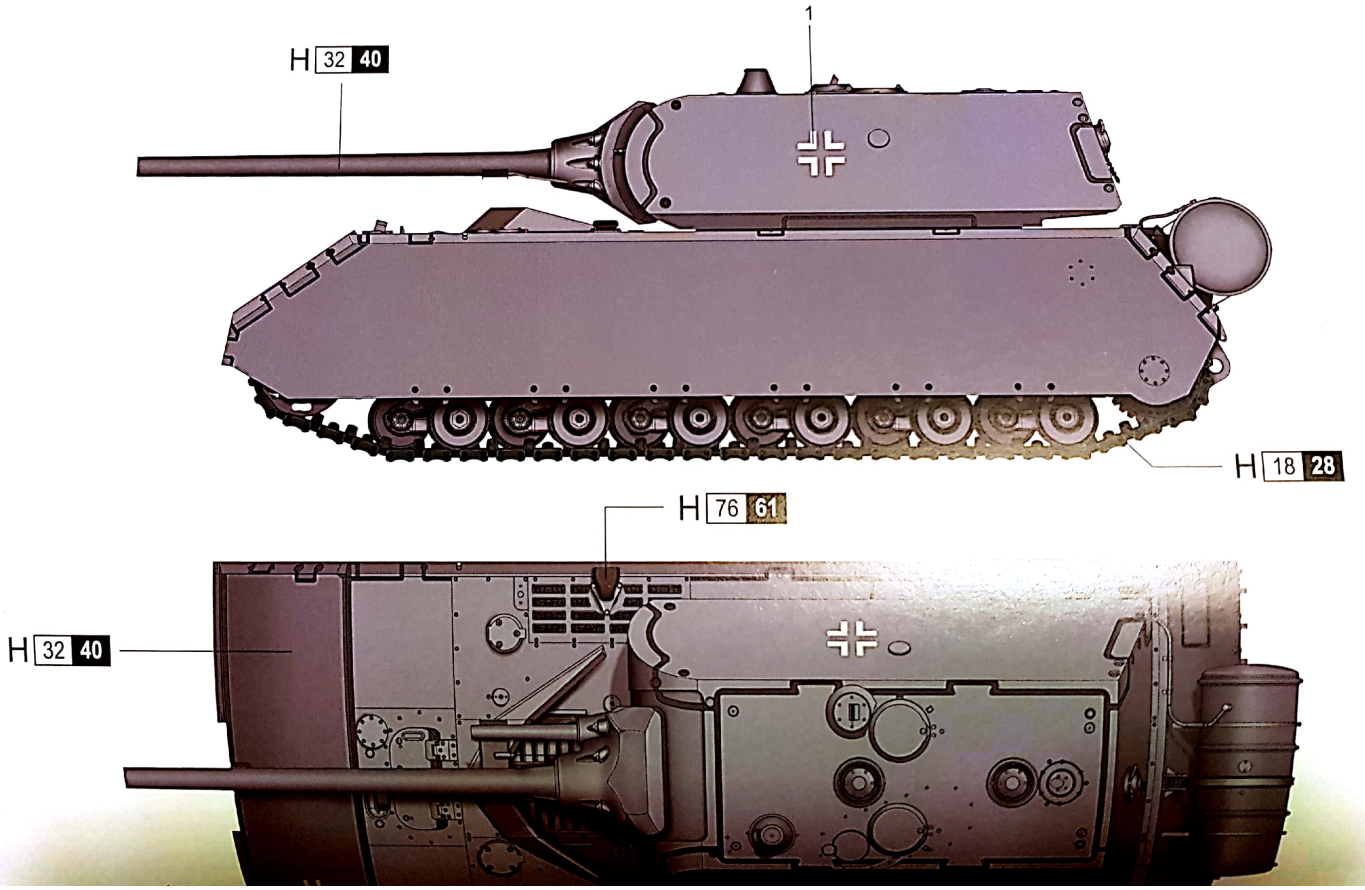

Scanned by CamScanner

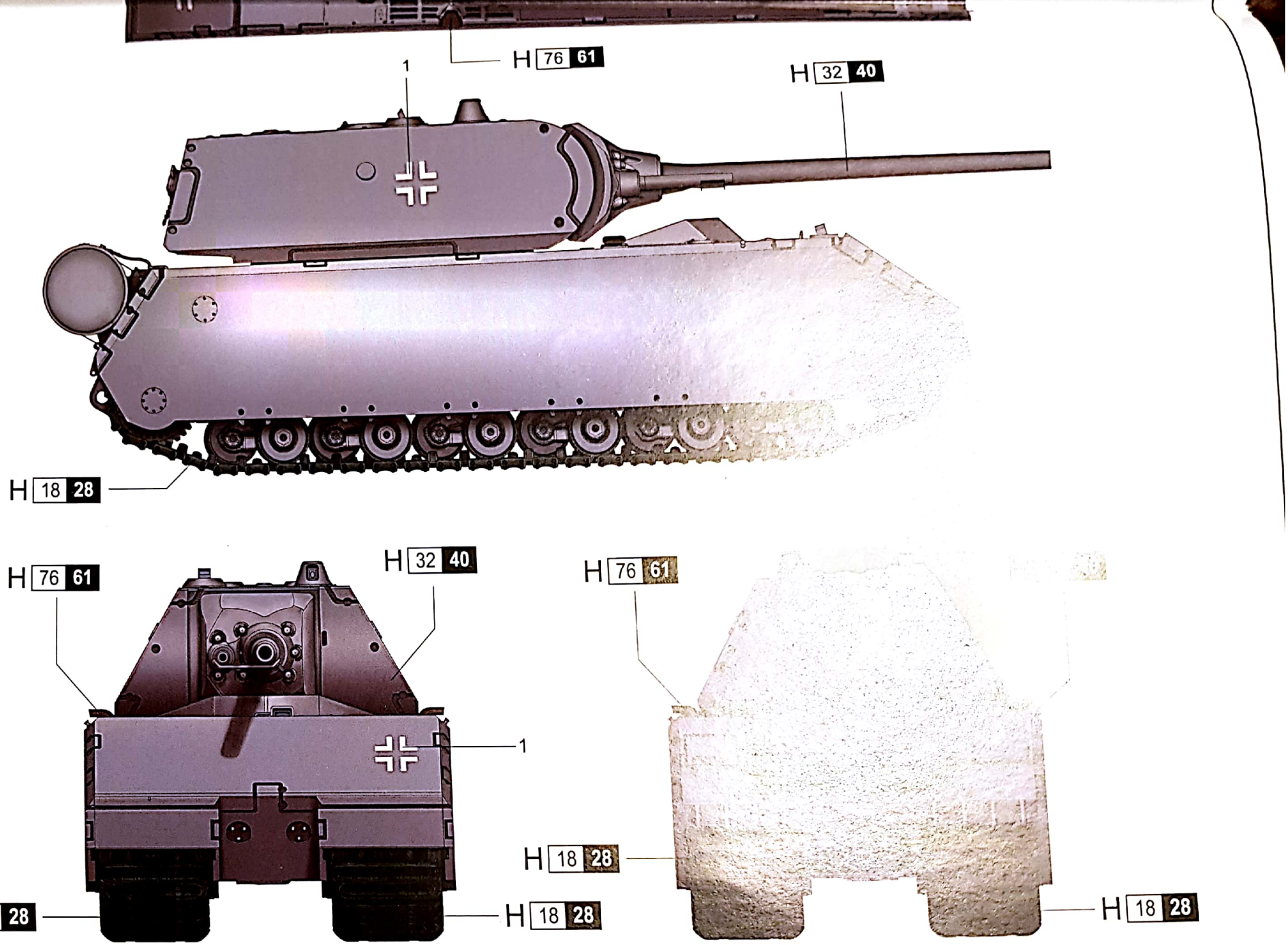

H☒ AQUEOUS HOBBY COLOR ☒ Mr. COLO
N☒ ACRYSION COLOR

Scanned by CamScanner