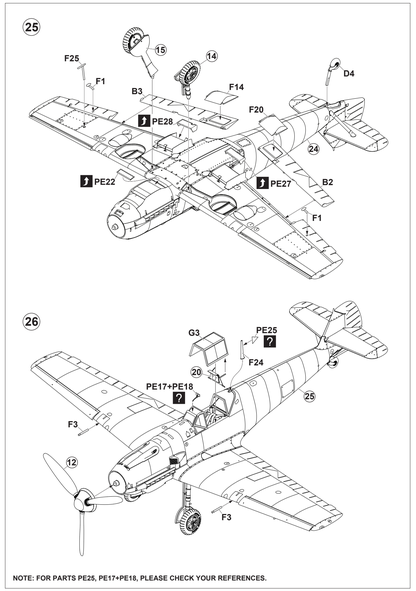

NOTE: FOR PARTS PE25, PE17+PE18, PLEASE CHECK YOUR REFERENCES.

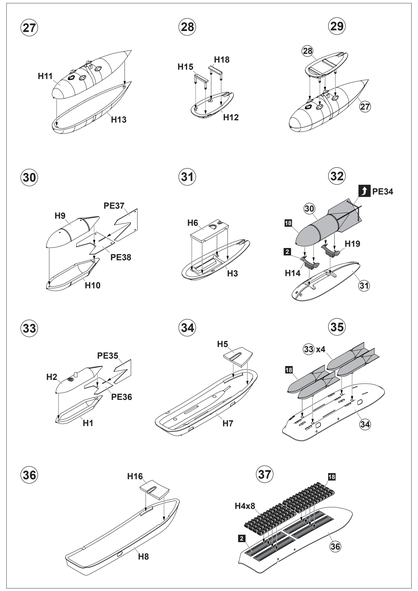

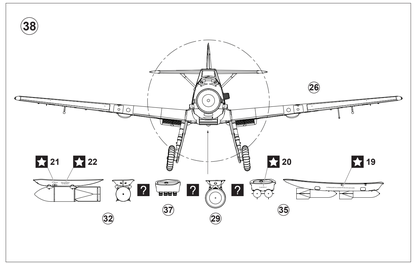

D5-07 German WWII Fighter MESSERSCHMITT Bf 109 E-1 1/48

D5-08 German WWII Fighter MESSERSCHMITT Bf 109 E-3 1/48

D5-09 MESSERSCHMITT Bf 109 E-1 and E-3 "Legion Condor" 1/48

D5-10 German WWII Fighter MESSERSCHMITT Bf 109 E-4 1/48

Stencils Scheme

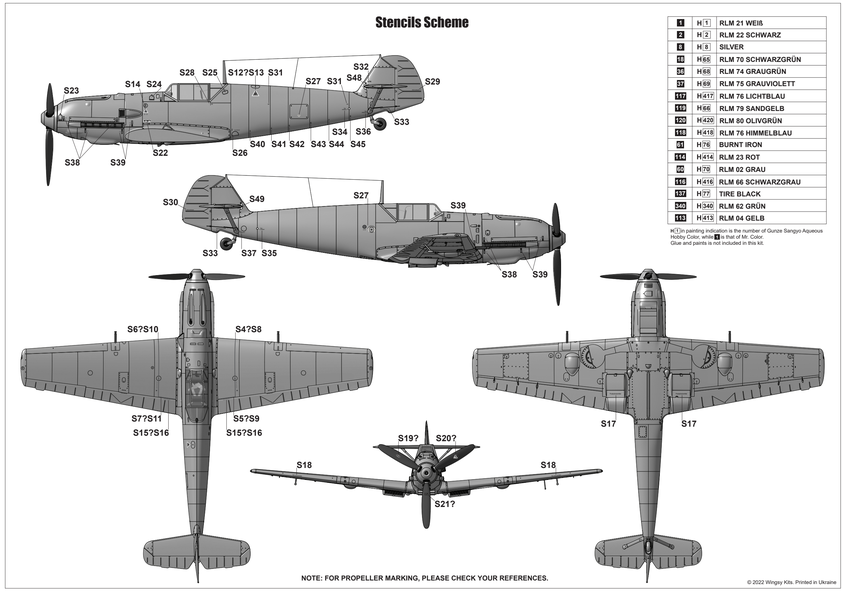

1	H 1	RLM 21 WEIß
2	H 2	RLM 22 SCHWARZ
3	H 6	SILVER
4	H 65	RLM 70 SCHWARZGRÜN
5	H 68	RLM 74 GRAUGRÜN
6	H 69	RLM 75 GRAUVIOLETT
117	H 417	RLM 76 LICHTBLAU
118	H 66	RLM 79 SANDGELB
120	H 420	RLM 80 OLIVGRÜN
119	H 418	RLM 76 HIMMELBLAU
31	H 76	BURNT IRON
114	H 414	RLM 23 ROT
90	H 79	RLM 02 GRAU
116	H 416	RLM 66 SCHWARZGRAU
117	H 77	TIRE BLACK
340	H 340	RLM 62 GRÜN
113	H 413	RLM 04 GELB

H□□n painting indication is the number of Gunze Sangyo Aqueous Hobby Color, while 1 is that of Mr. Color.
Glue and paints is not included in this kit.

Item No. D5-11 scale 1/48

wingsy kits

German WWII Fighter MESSERSCHMITT Bf 109 E-7 «Emil»

The Messerschmitt Bf 109 E «Emil» was a further development of the very successful fighter line developed by Bayerische Flugzeugwerke under the leadership of Wilhelm Messerschmitt and Robert Lusser, which went into production at the end of 1938. To improve on the performance afforded by the 441–515 kW (600–700 PS) Jumo 210, the larger, longer Daimler-Benz DB 601A engine was used, yielding an extra 223 kW (300 PS) at the cost of an additional 181 kg (400 lb). A much bigger cooling area was needed to disperse the extra heat generated by the DB 601, and this led to the first major redesign of the basic airframe. Enlarging the existing nose-mounted radiator sufficiently to cool the engine would have created extra weight and drag, negating some of the performance gains afforded by the increased power, so it was decided to move the main radiators to the undersurfaces of the wings immediately outboard of the junction of the wing root and wing panel, just forward of the trailing edges' inner ends, leaving the oil cooler under the nose in a small, streamlined duct. The new radiator position also had the effect of counterbalancing the extra weight and length of the DB 601, which drove a heavier three-bladed Vereinigte Deutsche Metallwerke (VDM)-made propeller. Because the radiators were mounted near the trailing edge of the wing, coinciding with the increased speed of the airflow accelerating around the wing camber, cooling was more effective than that of the Jumo engined 109s, albeit at the cost of extra ducting and piping, which was vulnerable to damage. The experience of the Luftwaffe in the western campaign of 1940, and especially in the first weeks of the Battle of Britain, pointed out the great shortcomings of the then existing Bf 109s, namely their short range and inability to carry any bombs. Further development led to a new version based on the E-4. The main modifications to the E-7 were a change in the fuel system and the installation of an external fuel tank rack for a new external 300 liter tank. Another important characteristic of the E-7 was the ability to carry bombs. The Bf 109 E-7 entered service in September 1940 and played a significant role in the last weeks of the Battle of Britain and continued in subsequent military campaigns.

Specifications Bf 109 E-4 - Crew: 1; Lenght: 28'10½" (8.8m); Wingspan: 32'5½" (9.9m); Weight: 4542-5875 lbs (2060-2665 kg); Wing area: 174.05 sq. feet (16.7 sq. m); Max speed: 360 mph (578 km/h) at 14560 feet (4500 m); Climb rate: 3100 feet per min (15.75 m/s); Ceiling: 33785 feet (10300 m); Range: 410 miles (660 km); Engine: 1 x 895 kW (1200 hp) Daimler-Benz DB601N (12-cylinder, direct fuel injection, inverted V engine); Armament: 2 x 7.92 mm MG 17 machine guns and 2 x 20 mm MG FF/M canons.

⚠ CAUTION

- ★ *Read carefully and fully understand the instructions before commencing assembly.*
- ★ *Adult supervisor should also read instructions when assembled by children aged 14 or younger.*
- ★ *Tear up and throw away the plastic bags containing kit parts as children may suffocate by swallowing or wearing over head.*
- ★ *Cut the parts off properly and throw the waste parts into dustbox at once.*
- ★ *Do not play with the parts for any other purpose as some parts may be too sharp. More caution and care needed for families with infants.*
- ★ *Do not swallow any parts and cut-off chips. Keep away from reach of children.*
- ★ *Wrong or careless usage of nipper, cutter, file etc. may hurt the assembler.*
- ★ *Be cautions as follows when using adhesives and / or paints:*
  - *Do not use in closed room to avoid poisoning / toxic.*
  - *Do not use near fire to avoid flammability.*
  - *Do not put any adhesives and/or paints into mouth and eye. If mistakenly put into, wash out promptly with full water and consult a medic.*
- ★ *Use toolings, adhesives, paints, batteries etc. properly after careful reading of instructions given in each handling manual.*

NOTE: FOR PROPELLER MARKING, PLEASE CHECK YOUR REFERENCES.

© 2022 Wingsy Kits. Printed in Ukraine

REMOVE | OPEN HOLE | BEND | DO NOT GLUE | OPTIONAL | APPLY DECAL | QUANTITY OF OPERATIONS

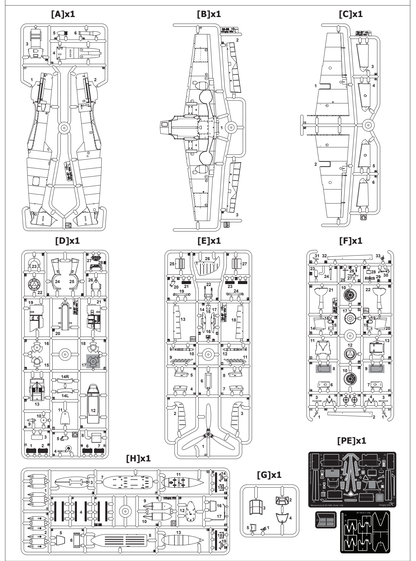

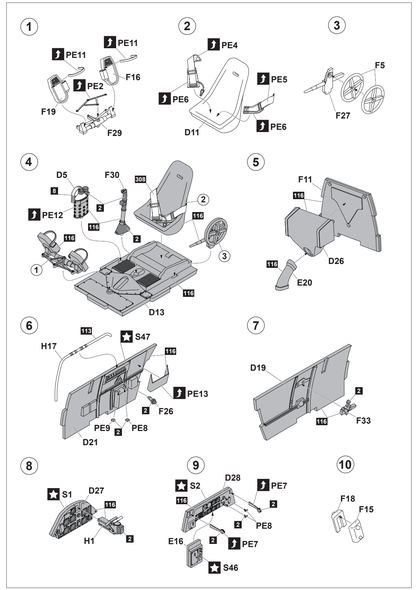

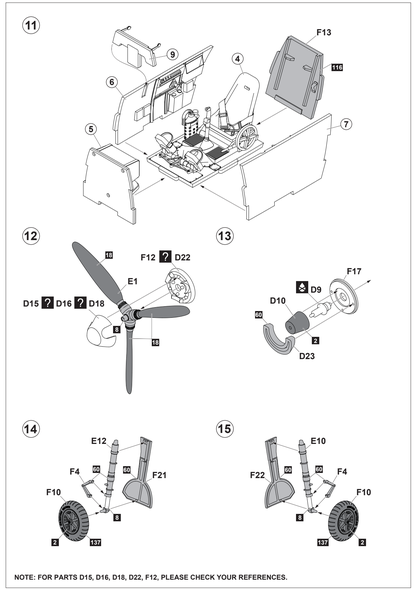

NOTE: FOR PARTS D15, D16, D18, D22, F12, PLEASE CHECK YOUR REFERENCES.

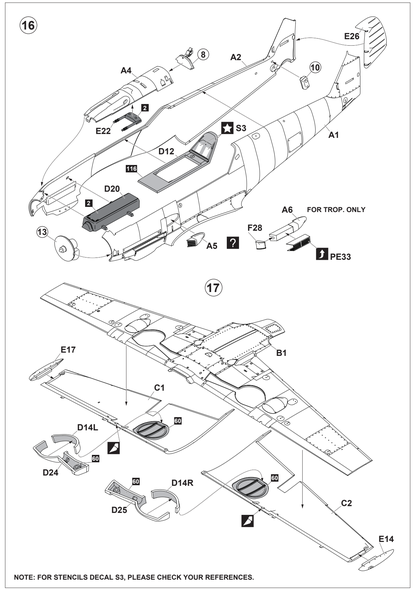

NOTE: FOR STENCILS DECAL S3, PLEASE CHECK YOUR REFERENCES.

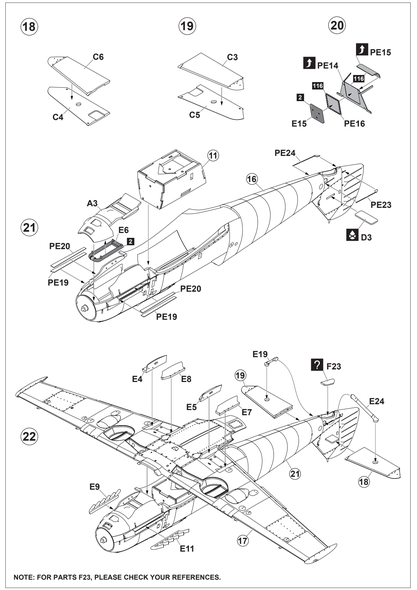

NOTE: FOR PARTS F23, PLEASE CHECK YOUR REFERENCES.

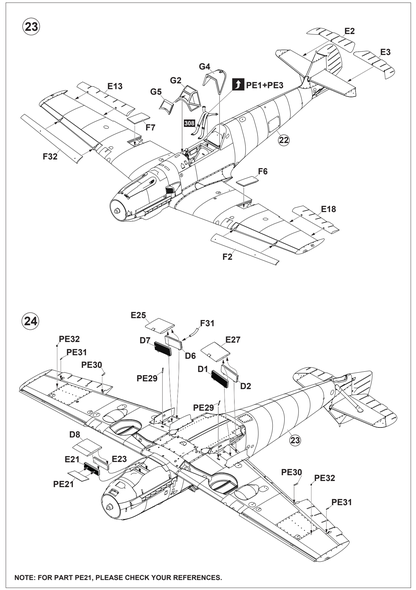

NOTE: FOR PART PE21, PLEASE CHECK YOUR REFERENCES.